TU

TU

IKO C-Lube Maintenance-free

Ball screw
Linear

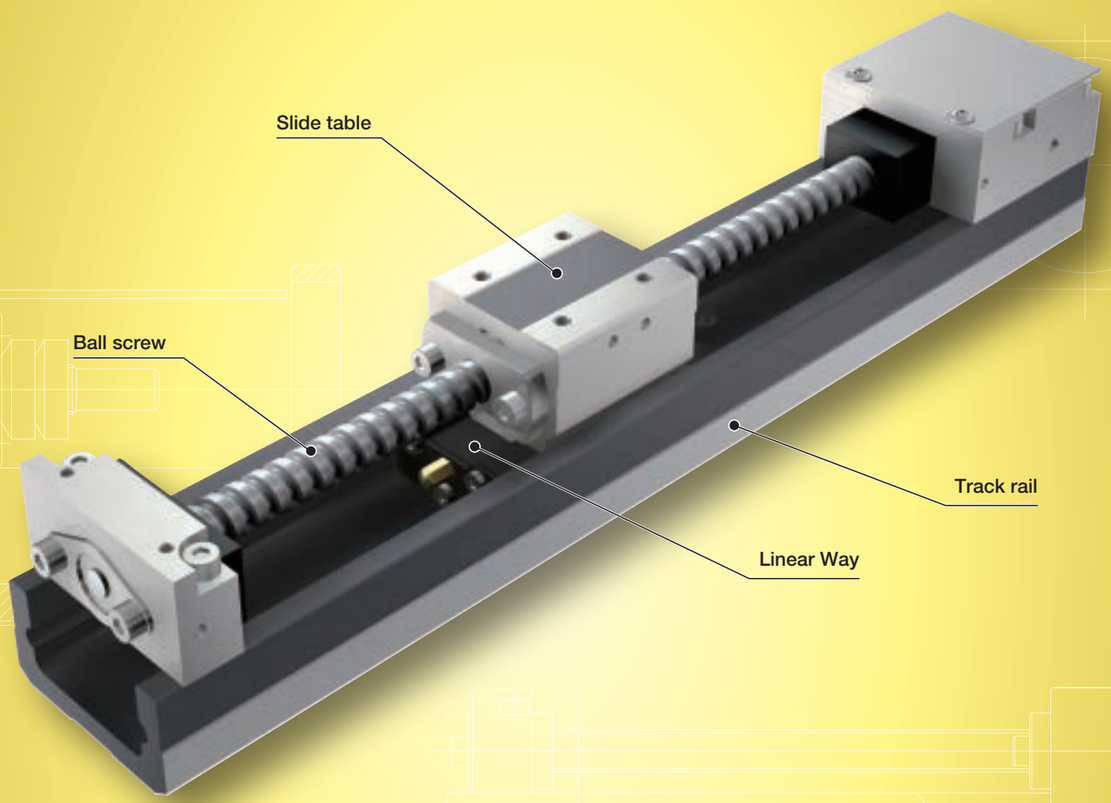

Major product specifications

Driving method	Precision ball screw and rolled ball screw
Linear motion rolling guide	Linear Way (ball type)
Built-in lubrication part	No built-in (The identification number is provided for your selection to attach lubrication part "C-Lube" or not)
Material of table and bed	High carbon steel
Sensor	Select by identification number

Accuracy

unit: mm

Positioning repeatability	±0.002～0.040
Positioning accuracy	0.020～0.050
Lost motion	–
Parallelism in table motion A	–
Parallelism in table motion B	0.008～0.030
Attitude accuracy	–
Straightness	–
Backlash	0.003～0.050

Points

● Compact and slim type positioning table with an original U-shaped track rail

1 Precision Positioning Table TU is a compact and slim type positioning table with a slide table assembled inside a U-shaped track rail.
Also, by adopting a U-shaped track rail, the rigidity of the track rail under moment load and torsion is greatly increased. The track rail can be used as a structure beam of the machine and equipment. Therefore, freedom of design is expanded for user.

● Slide table with high accuracy and high rigidity in a single structure

2 The slide table is an integral part of a linear motion rolling guide mechanism, in which large diameter steel balls are arranged in two rows and make four-point contact with the raceways. High accuracy and high rigidity positioning can thus be obtained even in applications where fluctuating load or complex load is applied.

● The optimal table specification can be selected from a variety of options

➔ Page Ⅱ-33

3 The optimal positioning table for each specific application can be configured easily by only indicating required functions and performance from our substantial size variations and a variety of options by the identification number.

Variation

Shape		Model	Track rail width (mm) 25	30	40	50	60	86	100	130
Standard 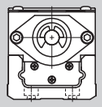	Short table 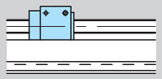	TU…C	–	–	☆	☆	☆	☆	–	–
	Standard table 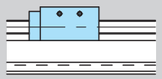	TU…S	☆	☆	☆	☆	☆	☆	☆	☆
	Long table 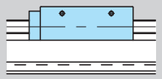	TU…G	–	–	☆	☆	☆	☆	–	–
With flange 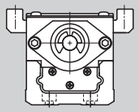	Short table	TU…FC	–	–	–	–	☆	☆	–	–
	Standard table 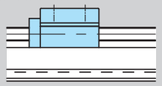	TU…F	☆	☆	☆	☆	☆	☆	☆	☆
	Long table 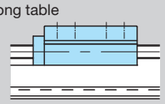	TU…FG	–	–	–	–	☆	☆	–	–

1N=0.102kgf=0.2248lbs.
1mm=0.03937inch

Special specifications that can be specified by the identification number

Shape and length of the slide table

The shape can be selected from two types, "standard" type and "with flange" type, and three types with different length with same section, i.e. short, standard, and long are listed on lineup. A bridge cover and XY bracket can be attached to the "with flange" type.

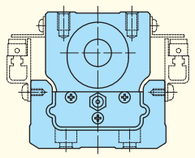

Standard
Short (C), standard (no symbol), long (G)

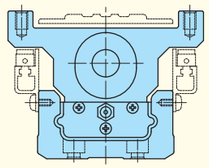

With flange
Short (FC), standard (F), long (FG)

Number of slide tables

Two slide tables can be mounted on the track rail depending on the applied load and the moment.

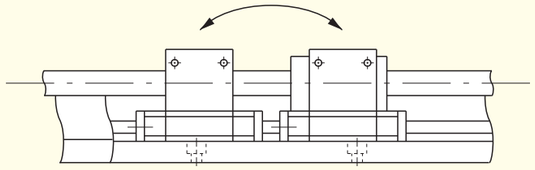

Type and lead of ball screw

Rolled ball screws and precision ball screws can be selected according to required accuracy. Ball screw lead is also selectable. The specification without ball screw can be used as a driven side linear motion rolling guide in biaxial parallel arrangement.

Designation of sensor

Mounting of various sensors such as limit sensors and origin sensors can be designed.

Table with C-Lube

Maintenance works such as relubricating with grease for ball screws and linear motion rolling guides can be reduced significantly by attaching lubrication part "C-Lube" impregnated with lubricant.

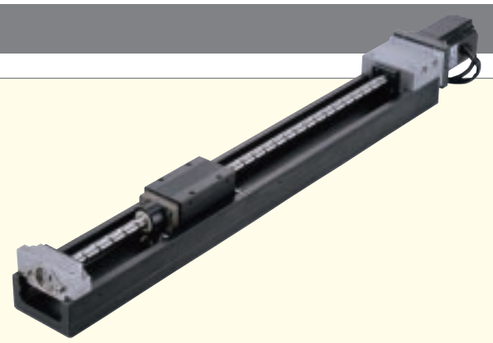

Motor folding back specification

The motor folding back specification table can realize space saving by reducing the overall length of the table.

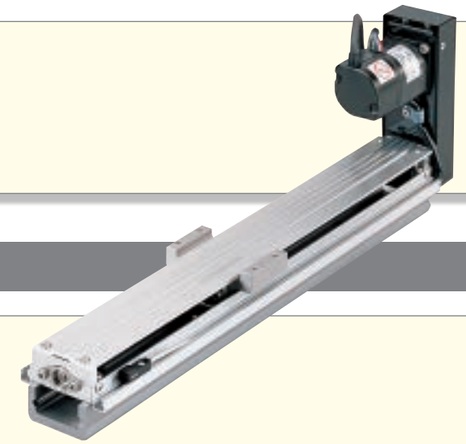

With bridge cover

A bridge cover can be attached to the "With flange" type.

Table with bellows

A series of tables with bellows is available for preventing foreign matter from intruding into the table by covering the linear motion rolling guide and drive section with bellows.

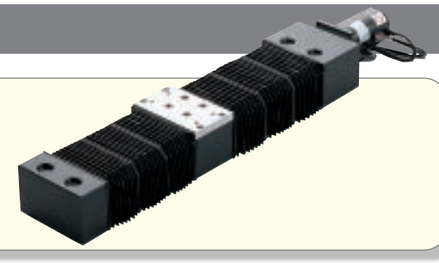

Black chrome surface treatment

Black permeable film is applied on the surface of slide table and ball screw to improve the corrosion resistance.

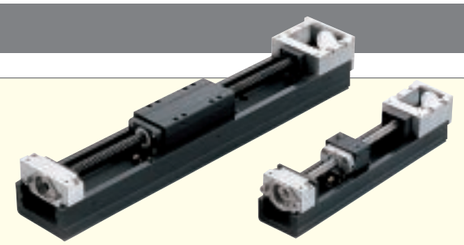

XY bracket

XY table can be configured easily since a series of XY bracket is available.

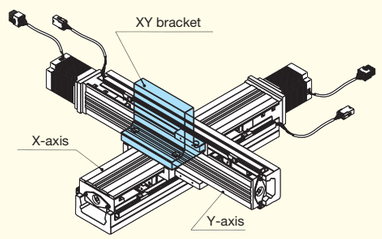

Identification Number

Example of an Identification Number

1	2	3	4		5	6	7	8	9	10	11	12
TU	86	FG	89	/	AT105	G	10	S	0	0	R	Q

1 **Model** Page Ⅱ-36

2 **Size** Page Ⅱ-36

3 **Shape of slide table** Page Ⅱ-36

4 **Length of track rail** Page Ⅱ-36

5 **Designation of motor attachment** Page Ⅱ-37

6 **Ball screw type** Page Ⅱ-37

7 **Ball screw lead** Page Ⅱ-37

8 **Number of slide table** Page Ⅱ-37

9 **Cover specification** Page Ⅱ-38

10 **Specification of sensor** Page Ⅱ-38

11 **Specification of surface treatment** Page Ⅱ-38

12 **Specification of C-Lube** Page Ⅱ-38

Identification Number and Specification

1 Model

TU: Precision Positioning Table TU

2 Size

Size indicates bed width.
Select a size from the list of Table 1.

3 Shape of slide table

C : Short table
S : Standard table
G : Long table
FC: Flange type short table
F : Flange type standard table
FG: Flange type long table

Table 1 Application of shape of slide table

Model and size	Model code					
	TU···C	TU···S	TU···G	TU···FC	TU···F	TU···FG
TU 25	–	○	–	–	○	–
TU 30	–	○	–	–	○	–
TU 40	○	○	○	–	○	–
TU 50	○	○	○	–	○	–
TU 60	○	○	○	○	○	○
TU 86	○	○	○	○	○	○
TU100	–	○	–	–	○	–
TU130	–	○	–	–	○	–

4 Length of track rail

From the [Identification] of track rail length shown in Table 2.1 and 2.2, select your desired one.

Table 2.1 Length of track rail (motor inline specification) unit: mm

Model and size	[Identification] of the length and dimensions of the track rail									
TU 25	[13] 130	[16] 165	[20] 200	–	–	–	–	–	–	–
TU 30	[14] 140	[18] 180	[22] 220	[26] 260	[30] 300	[34] 340	–	–	–	–
TU 40	[18] 180	[24] 240	[30] 300	[36] 360	[42] 420	–	–	–	–	–
TU 50	[22] 220	[30] 300	[38] 380	[46] 460	[54] 540	[62] 620	[70] 700	–	–	–
TU 60	[29] 290	[39] 390	[49] 490	[59] 590	[69] 690	[79] 790	[99] 990	[119]1 190	–	–
TU 86	[49] 490	[59] 590	[69] 690	[79] 790	[89] 890	[99] 990	[109]1 090	[119]1 190	[139]1 390	[159]1 590
TU100	[101]1 010	[116]1 160	[131]1 310	[146]1 460	–	–	–	–	–	–
TU130	[101]1 010	[116]1 160	[131]1 310	[146]1 460	[161]1 610	–	–	–	–	–

Remark: For stroke lengths, please see the dimension tables shown in pages of Ⅱ-63 or later.

Table 2.2 Length of track rail (motor folding back specification) unit: mm

Model and size	[Identification] of the length and dimensions of the track rail							
TU 40	[14] 140	[20] 200	[26] 260	[32] 320	[38] 380	–	–	–
TU 50	[18] 180	[26] 260	[34] 340	[42] 420	[50] 500	[58] 580	[66] 660	–
TU 60	[24] 244	[34] 344	[44] 444	[54] 544	[64] 644	[74] 744	–	–
TU 86	[44] 442	[54] 542	[64] 642	[74] 742	[84] 842	[94] 942	[104]1 042	[114]1 142

Remark: For stroke length, please see the dimension tables shown in pages of Ⅱ-75 or later.

1N=0.102kgf=0.2248lbs.
1mm=0.03937inch

5 Designation of motor attachment

AT100 : Motor inline specification Without motor attachment
AT101 to AT125 : Motor inline specification With motor attachment
AR100 : Motor folding back specification Without motor attachment
AR101 to AR110 : Motor folding back specification With motor attachment

Application of motor folding back specification is shown in Table 3. To specify the motor attachment, select it from the list of Table 6.1 and Table 6.2.

- Motor should be prepared by customer.
- Please specify motor folding back specification and motor attachment applicable to motor for use.
- If motor inline specification with motor attachment is specified, the main body is shipped with a coupling indicated in the Table 7 mounted. However, the final position adjustment should be made by customer since it is only temporarily fixed. For a product without motor attachment (AT100), no coupling is attached.
- If motor folding back specification with motor attachment is specified, "housing applicable to the specified motor, pulley (on motor side and ball screw side), cover, motor bracket, belt and bolts necessary for assembly" are supplied. Motor mounting bolts should be prepared by customer.

Table 3 Application of motor folding back specification

Model and size	With motor attachment		Without motor attachment
	AC servomotor	Stepper motor	
TU 25	–	–	–
TU 30	–	–	–
TU 40	○	○	○
TU 50	○	○	○
TU 60	○	–	○
TU 86	○	–	○
TU100	–	–	–
TU130	–	–	–

6 Ball screw type

No symbol: Rolled screw
G : Ground screw
N : Without ball screw
From among various types of ball screws shown in Table 4, select your desired one.

When specifying N
- For the entry of section 5, specify AT100 or AR100, and for the entry of section 7, specify "No symbol".
- For the entry of section 10, select "Without sensor" (by specifying 0).
- In the entry of section 9, you cannot specify "With bellows".

7 Ball screw lead

From among ball screw leads applicable to the sizes shown in Table 4, select your desired one.

Table 4 Application of ball screw lead

Model and size	Ball screw type	Ball screw lead mm					
		4	5	8	10	20	25
TU 25	Ground screw	○	–	–	–	–	–
TU 30	Ground screw	–	○	–	–	–	–
TU 40	Rolled screw	○	–	○	–	–	–
	Ground screw	○	–	○	–	–	–
TU 50	Rolled screw	–	○	–	○	–	–
	Ground screw	–	○	–	○	–	–
TU 60	Rolled screw	–	○	–	○	–	–
	Ground screw	–	○(1)	–	○(1)	○(1)	–
TU 86	Rolled screw	–	–	–	○(2)	○(2)	–
	Ground screw	–	–	–	○(2)	○	–
TU100	Ground screw	–	–	–	–	○	–
TU130	Ground screw	–	–	–	–	–	○

Notes (1) This is not applied to track rail lengths of 990mm and 1,190mm.
(2) This is not applied to track rail lengths of 1,390mm and 1,590mm.

8 Number of slide table

S: One unit
C: Two units

9 Cover specification

0 : Without cover
C: With bridge cover (applied to TU···FC, TU···F, and TU···FG)
J : With bellows (applied to TU60S and TU86S)

- When specifying "With bellows (J)", select 1 piece (by specifying S) for the entry of section 8.
- "With bellows" type is not provided for TU60 with track rail lengths of 990 and 1,190mm and TU86 with track rail lengths of 1,390 and 1,590mm.
- "With bridge cover" type is not provided for TU60 with track rail lengths of 1,190mm and TU86 with track rail lengths of 1,590mm.

10 Specification of sensor

0: Without a sensor, without a sensor rail
2: Two sensors (limit), with a sensor rail
3: Three sensors (limit and pre-origin), with a sensor rail
4: Four sensors (limit, pre-origin, and origin), with a sensor rail
9: Without a sensor, with a sensor rail

11 Specification of surface treatment

No symbol: Not treated
R : Black chrome surface treatment 1
Black chrome surface treatment is applied on the surfaces of a slide table and track rail.
L : Black chrome surface treatment 2
In addition to the black chrome surface treatment 1, this treatment is applied on the ball screw shaft and nut.

12 Specification of C-Lube

No symbol: No C-Lube
Q : Table with C-Lube

A C-Lube is mounted on the slide table and the end face of a nut of ball screw. The C-Lube is a lubrication part with much lubricant oil impregnated in the consecutive porous resin. Sliding or moving along a smooth surface with contact on the track rail and the raceway surface of the ball screw causes the lubricant oil within the plate to continue to seep on the raceway surface, thus reducing the number of hours for maintenance caused by the extension of lubrication interval. This is an effective countermeasure for the attrition of grease at the location difficult to be lubricated.

- When specifying Q, for the entry of section 6, select ground screw (by specifying G) or without ball screw (by specifying N).

Table 5 Application of C-Lube

Model and size	Rolled screw	Ground screw	Without ball screw
TU 25	–	–	–
TU 30	–	–	–
TU 40	–	○	○
TU 50	–	○	○
TU 60	–	○	○
TU 86(1)	–	○	○
TU100	–	○	○
TU130	–	○	○

Note (1) For the track rail lengths of 1,390mm and 1,590mm in TU86, please contact IKO.

1N=0.102kgf=0.2248lbs.
1mm=0.03937inch

Table 6.1 Application of motor attachment (motor inline specification)

Models of motor to be used					Flange size mm	Motor attachment							
Type	Manufacturer	Series	Model	Rated output W		TU25	TU30	TU40	TU50	TU60	TU86	TU100	TU130
AC servomotor	YASKAWA ELECTRIC CORPORATION	Σ-V	SGMMV-A2	20	□25	AT101	AT101	–	–	–	–	–	–
			SGMMV-A3	30		AT101	AT101	–	–	–	–	–	–
			SGMJV-A5	50	□40	–	–	AT102	AT102	–	–	–	–
			SGMAV-A5			–	–	AT102	AT102	–	–	–	–
			SGMJV-01	100		–	–	AT102	AT102	AT103	–	–	–
			SGMAV-01			–	–	AT102	AT102	AT103	–	–	–
			SGMAV-C2	150		–	–	–	–	AT103	–	–	–
			SGMJV-02	200	□60	–	–	–	–	AT104	AT105	–	–
			SGMAV-02			–	–	–	–	AT104	AT105	–	–
			SGMJV-04	400		–	–	–	–	–	AT106	AT107	–
			SGMAV-04			–	–	–	–	–	AT106	AT107	–
			SGMAV-06	550		–	–	–	–	–	AT106	AT107	–
			SGMJV-08	750	□80	–	–	–	–	–	–	–	AT108
			SGMAV-08			–	–	–	–	–	–	–	AT108
	Mitsubishi Electric Corporation	J2-Jr	HC-AQ023	20	□28	AT109	AT109	–	–	–	–	–	–
			HC-AQ033	30		AT109	AT109	–	–	–	–	–	–
		J3	HF-MP053	50	□40	–	–	AT102	AT102	–	–	–	–
			HF-KP053			–	–	AT102	AT102	–	–	–	–
			HF-MP13	100		–	–	AT102	AT102	AT103	–	–	–
			HF-KP13			–	–	AT102	AT102	AT103	–	–	–
			HF-MP23	200	□60	–	–	–	–	AT104	AT105	–	–
			HF-KP23			–	–	–	–	AT104	AT105	–	–
			HF-MP43	400		–	–	–	–	–	AT106	AT107	–
			HF-KP43			–	–	–	–	–	AT106	AT107	–
			HF-MP73	750	□80	–	–	–	–	–	–	–	AT108
			HF-KP73			–	–	–	–	–	–	–	AT108
	Panasonic Corporation	MINAS A5	MSMD5A	50	□38	–	–	AT110	AT110	–	–	–	–
			MSME5A			–	–	AT110	AT110	–	–	–	–
			MSMD01	100		–	–	AT110	AT110	AT111	–	–	–
			MSME01			–	–	AT110	AT110	AT111	–	–	–
			MSMD02	200	□60	–	–	–	–	AT112	AT113	–	–
			MSME02			–	–	–	–	AT112	AT113	–	–
			MSMD04	400		–	–	–	–	–	AT114	AT115	–
			MSME04			–	–	–	–	–	AT114	AT115	–
			MSMD08	750	□80	–	–	–	–	–	–	–	AT116
			MSME08			–	–	–	–	–	–	–	AT116
Stepper motor	ORIENTAL MOTOR Co., Ltd.	α step	AR46		□42	–	–	AT117	AT117	–	–	–	–
			AR66		□60	–	–	–	–	AT118	AT119	–	–
			AR69		□60	–	–	–	–	AT118	AT119	–	–
			AR98		□85	–	–	–	–	–	–	AT120	AT121
			AR911		□85	–	–	–	–	–	–	AT120	AT121
			AS46		□42	–	–	AT122	AT122	–	–	–	–
			AS66		□60	–	–	–	–	AT123	AT124	–	–
			AS69		□60	–	–	–	–	AT123	AT124	–	–
			AS98		□85	–	–	–	–	–	–	AT120	AT121
			AS911		□85	–	–	–	–	–	–	AT120	AT121
		RK CRK	CRK52		□28	AT125	AT125	–	–	–	–	–	–
			RK54 · CRK54		□42	–	–	AT122	AT122	–	–	–	–
			RK56 · CRK56 (1)		□60	–	–	–	–	AT123	AT124	–	–
			RK59		□85	–	–	–	–	–	–	AT120	AT121

Note (1) Applicable to the outer diameter $\phi 8$ of motor output shaft.
Remark: For detailed motor specifications, please see respective motor manufacturer's catalog.

Table 6.2 Application of motor attachment (motor folding back specification)

Models of motor to be used					Flange size mm	Motor attachment			
Type	Manufacturer	Series	Model	Rated output W		TU40	TU50	TU60	TU86
AC servo motor	YASKAWA ELECTRIC CORPORATION	Σ-V	SGMJV-A5	50	□40	AR101	AR101	–	–
			SGMAV-A5			AR101	AR101	–	–
			SGMJV-01	100		AR101	AR101	AR102	–
			SGMAV-01			AR101	AR101	AR102	–
			SGMAV-C2	150		–	–	AR102	–
			SGMJV-02	200	□60	–	–	AR103	AR104
			SGMAV-02			–	–	AR103	AR104
	Mitsubishi Electric Corporation	J3	HF-MP053	50	□40	AR101	AR101	–	–
			HF-KP053			AR101	AR101	–	–
			HF-MP13	100		AR101	AR101	AR102	–
			HF-KP13			AR101	AR101	AR102	–
			HF-MP23	200	□60	–	–	AR103	AR104
			HF-KP23			–	–	AR103	AR104
	Panasonic Corporation	MINAS A5	MSMD5A	50	□38	AR105	AR105	–	–
			MSME5A			AR105	AR105	–	–
			MSMD01	100		AR105	AR105	AR106	–
			MSME01			AR105	AR105	AR106	–
			MSMD02	200	□60	–	–	AR107	AR108
			MSME02			–	–	AR107	AR108
Stepper motor	ORIENTAL MOTOR Co., Ltd.	α step	AR46		□42	AR109	AR109	–	–
			AS46		□42	AR110	AR110	–	–
		RK · CRK	RK54 · CRK54		□42	AR110	AR110	–	–

Remark: For detailed motor specifications, please see respective motor manufacturers' catalog.

Table 7 Coupling models (motor inline specification)

Motor attachment	Coupling models	Manufacturer	Coupling inertia J_C $\times 10^{-5}$kg · m²
AT101	UA-15C- 5× 5	Sakai Manufacturing Co., Ltd	0.024
AT102	UA-20C- 5× 8	Sakai Manufacturing Co., Ltd	0.086
AT103	UA-25C- 8× 8	Sakai Manufacturing Co., Ltd	0.29
AT104	UA-30C- 8×14	Sakai Manufacturing Co., Ltd	0.603
AT105	UA-30C- 8×14	Sakai Manufacturing Co., Ltd	0.603
AT106	UA-35C- 8×14	Sakai Manufacturing Co., Ltd	1.34
AT107	UA-40C-12×14	Sakai Manufacturing Co., Ltd	2.61
AT108	UA-40C-15×19	Sakai Manufacturing Co., Ltd	2.61
AT109	UA-15C- 5× 6	Sakai Manufacturing Co., Ltd	0.024
AT110	UA-20C- 5× 8	Sakai Manufacturing Co., Ltd	0.086
AT111	UA-25C- 8× 8	Sakai Manufacturing Co., Ltd	0.29
AT112	UA-30C- 8×11	Sakai Manufacturing Co., Ltd	0.603
AT113	UA-30C- 8×11	Sakai Manufacturing Co., Ltd	0.603
AT114	UA-35C- 8×14	Sakai Manufacturing Co., Ltd	1.34
AT115	UA-40C-12×14	Sakai Manufacturing Co., Ltd	2.61
AT116	UA-40C-15×19	Sakai Manufacturing Co., Ltd	2.61
AT117	MSTS-16C- 5× 6	Nabeya Bi-tech Kaisha	0.090
AT118	MSTS-25C- 8×10	Nabeya Bi-tech Kaisha	0.710
AT119	MSTS-25C- 8×10	Nabeya Bi-tech Kaisha	0.710
AT120	MSTS-40C-12×14	Nabeya Bi-tech Kaisha	9.0
AT121	MSTS-40C-14×15	Nabeya Bi-tech Kaisha	9.0
AT122	MSTS-16C- 5× 5	Nabeya Bi-tech Kaisha	0.090
AT123	MSTS-25C- 8× 8	Nabeya Bi-tech Kaisha	0.710
AT124	MSTS-25C- 8× 8	Nabeya Bi-tech Kaisha	0.710
AT125	MSTS-12C- 5× 5	Nabeya Bi-tech Kaisha	0.022

Remark: For detailed coupling specification, please see respective manufacturer's catalog.

1N=0.102kgf=0.2248lbs.
1mm=0.03937inch

Specifications

Table 8.1 TU accuracy (rolled screw)

unit: mm

Length of track rail		Positioning repeatability	Parallelism in table motion B	Backlash (1)
Above	Below			
–	500	±0.025 (±0.040)	0.015	0.050
500	800		0.020	
800	1 200		0.025	

Note(1) This does not apply to table of motor folding back specification.
Remark: The positioning repeatability values in ( ) are reference values provided that the timing belt tension is properly adjusted in motor folding back specification table.

Table 8.2 TU accuracy (ground screw)

unit: mm

Length of track rail		Positioning repeatability		Positioning accuracy (1)		Parallelism in table motion B		Backlash (1)
Above	Below	Short table	Standard table Long table	Short table	Standard table Long table	Short table	Standard table Long table	
–	400(350)	±0.004 (±0.020)	±0.002 (±0.020)	0.030	0.020	0.015	0.008	0.003
400(350)	500(500)						0.010	
500(500)	600(550)			0.035	0.025	0.020		
600(550)	700(700)						0.012	
700(700)	800(800)			0.040	0.030			
800(800)	900(900)					0.025	0.014	
900(900)	1 000(1 000)			0.045	0.035			
1 000(1 000)	1 100(1 100)						0.016	
1 100(1 100)	1 200			0.050	0.040			
1 200	1 400			–		–	0.030	
1 400	1 500			–	0.045	–		
1 500	1 610			–	0.050	–		

Note (1) This does not apply to table of motor folding back specification.
Remark: The positioning repeatability values in ( ) are reference values provided that the timing belt tension is properly adjusted in motor folding back specification table.

Table 9.1 Maximum speed (AC servomotor)

Motor type	Model and size	Length of track rail mm	Maximum speed mm/s						
			Lead 2mm	Lead 4mm	Lead 5mm	Lead 8mm	Lead 10mm	Lead 20mm	Lead 25mm
AC servo motor	TU 25	200 or less	–	400	–	–	–	–	–
	TU 30	340 or less	–	–	500	–	–	–	–
	TU 40	–	–	400 (390)	–	800 (790)	–	–	–
	TU 50	540 or less	–	–	500 (390)	–	1 000 (780)	–	–
		620	–	–	370 (350)	–	750 (710)	–	–
		700	–	–	280 (260)	–	560 (540)	–	–
	TU 60	590 or less	–	–	470 (330)	–	930 (660)	1 860	–
		690	–	–	380 (330)	–	780 (660)	1 620	–
		790	–	–	270 (280)	–	560 (560)	1 170	–
		990	–	–	(160)	–	(330)	–	–
		1 190	–	–	(110)	–	(210)	–	–
	TU 86	690 or less	–	–	–	–	750 (530)	1 480 (1 050)	–
		790	–	–	–	–	700 (530)	1 410 (1 050)	–
		890	–	–	–	–	530 (530)	1 060 (1 050)	–
		990	–	–	–	–	410 (410)	830 (830)	–
		1 090	–	–	–	–	330 (330)	670 (670)	–
		1 190	–	–	–	–	270 (270)	550 (550)	–
		1 390	–	–	–	–	–	530	–
		1 590	–	–	–	–	–	390	–
	TU100	1 010	–	–	–	–	–	1 110	–
		1 160	–	–	–	–	–	990	–
		1 310	–	–	–	–	–	730	–
		1 460	–	–	–	–	–	560	–
	TU130	1 010	–	–	–	–	–	–	1 110
		1 160	–	–	–	–	–	–	1 110
		1 310	–	–	–	–	–	–	1 110
		1 460	–	–	–	–	–	–	930
		1 610	–	–	–	–	–	–	730

Remark 1. The value in ( ) is applicable to rolled screws.
2. To measure the practical maximum speed, it is required to consider operation patterns based on the motor to be used and load conditions.

Table 9.2 Maximum speed (stepper motor)

Motor type	Model and size	Length of track rail mm	Number of revolutions of motor min^{-1}	Maximum speed mm/s						
				Lead 2mm	Lead 4mm	Lead 5mm	Lead 8mm	Lead 10mm	Lead 20mm	Lead 25mm
Stepper motor	TU 25	200 or less	1 800	–	120	–	–	–	–	–
	TU 30	340 or less	1 800	–	–	150	–	–	–	–
	TU 40	–	1 800	–	120	–	240	–	–	–
	TU 50	–	1 800	–	–	150	–	300	–	–
	TU 60	790 or less	1 800	–	–	–	–	–	600	–
		990 or less	1 800	–	–	150	–	300	–	–
		1 190	1 290	–	–	108	–	215	–	–
	TU 86	990 or less	1 800	–	–	–	–	300	600	–
		1 090	1 770	–	–	–	–	295	590	–
		1 190	1 460	–	–	–	–	243	487	–
		1 390	1 610	–	–	–	–	–	537	–
		1 590	1 200	–	–	–	–	–	400	–
	TU100	1 160 or less	1 800	–	–	–	–	–	600	–
		1 310	1 780	–	–	–	–	–	593	–
		1 460	1 400	–	–	–	–	–	467	–
	TU130	1 310 or less	1 800	–	–	–	–	–	–	750
		1 460	1 720	–	–	–	–	–	–	717
		1 610	1 390	–	–	–	–	–	–	579

Remark: To measure the practical maximum speed, it is required to consider operation patterns based on the motor to be used and load conditions.

1N=0.102kgf=0.2248lbs.
1mm=0.03937inch

Table 10 Maximum carrying mass

Model and size	Ball screw type	Ball screw lead mm	Length of slide table	Maximum carrying mass kg	
				Horizontal	Vertical
TU 25	Ground screw	4	Standard	11	4.8
TU 30	Ground screw	5	Standard	15	5
TU 40	Ground screw	4	Short	24	11
			Standard	39	11
			Long	59	11
		8	Short	24	7
			Standard	39	7
			Long	46	7
	Rolled screw	4	Short	24	8
			Standard	39	8
			Long	59	8
		8	Short	24	5
			Standard	32	4.8
			Long	47	8
TU 50	Ground screw	5	Short	35	13
			Standard	64	13
			Long	100	13
		10	Short	35	8
			Standard	44	8
			Long	43	8
	Rolled screw	5	Short	35	11
			Standard	64	11
			Long	100	11
		10	Short	35	9
			Standard	47	8
			Long	47	8
TU 60	Ground screw	5	Short	48	16
			Standard	88	15
			Long	146	15
		10	Short	48	11
			Standard	58	10
			Long	58	10
		20	Short	29	10
			Standard	28	9
			Long	28	9
	Rolled screw	5	Short	48	14
			Standard	88	13
			Long	143	13
		10	Short	46	8
			Standard	45	8
			Long	45	7
TU 86	Ground screw	10	Short	97	29
			Standard	154	28
			Long	153	27
		20	Short	69	27
			Standard	75	25
			Long	75	25
	Rolled screw	10	Short	97	23
			Standard	124	22
			Long	123	21
		20	Short	49	16
			Standard	47	15
			Long	47	14
TU100	Ground screw	20	Standard	81	27
TU130	Ground screw	25	Standard	92	34

Remark: The value is for one slide table.

Table 11 Load rating of linear motion rolling guide

Model and size	Length of slide table	Basic dynamic load rating C N	Basic static load rating C_0 N	Static moment rating (1) N・m		
				T_0	T_X	T_Y
TU 25	Standard	1 770	2 840	20.3(40.6)	10.1(53.7)	8.4(45.0)
TU 30	Standard	2 280	3 810	34.9(69.8)	16.9(87.5)	14.2(73.4)
TU 40	Short	6 050	6 110	83.8(167.6)	22.8(185)	22.8(185)
	Standard	8 410	9 780	134 (268)	53.0(351)	53.0(351)
	Long	11 200	14 700	201 (402)	113 (649)	113 (649)
TU 50	Short	8 930	8 800	156 (312)	39.5(315)	39.5(315)
	Standard	13 500	15 800	280 (560)	114 (711)	114 (711)
	Long	18 400	24 600	436 (872)	260 (1 420)	260 (1 420)
TU 60	Short	12 400	12 000	236 (472)	62.7(486)	62.7(486)
	Standard	18 800	21 600	425 (850)	181 (1 150)	181 (1 150)
	Long	26 800	35 900	708 (1 416)	472 (2 470)	472 (2 470)
TU 86	Short	24 100	23 800	677 (1 354)	183 (1 280)	183 (1 280)
	Standard	41 400	51 500	1 470 (2 940)	764 (4 120)	764 (4 120)
	Long	49 900	67 300	1 920 (3 840)	1 270 (6 290)	1 270 (6 290)
TU100	Standard	54 600	68 500	2 230 (4 460)	1 210 (6 460)	1 210 (6 460)
TU130	Standard	70 300	88 800	3 920 (7 840)	1 830 (9 630)	1 830 (9 630)

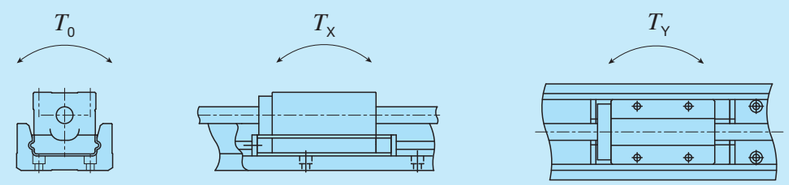

Note (1) In directions indicated in the above figures, the value in ( ) is for two slide tables in close contact.

1N=0.102kgf=0.2248lbs.
1mm=0.03937inch

Table 12.1 Specifications of ball screw 1

Model and size	Ball screw type	Lead mm	Shaft dia. mm	Axial clearance mm	Basic dynamic load rating C N	Basic static load rating C_0 N
TU 25	Ground screw	4	6	0.005 or less	950	1 630
TU 30	Ground screw	5	8	0.005 or less	1 080	2 160
TU 40	Rolled screw	4	8	0.05 or less	1 600	2 800
		8			1 000	1 600
	Ground screw	4	8	0.005 or less	2 290	3 575
		8			1 450	2 155
TU 50	Rolled screw	5	10	0.05 or less	2 300	4 800
		10			1 850	3 200
	Ground screw	5	10	0.005 or less	2 730	4 410
		10			1 720	2 745
TU 60	Rolled screw	5	12	0.05 or less	2 800	5 000
		10			1 800	3 200
	Ground screw (1)	5	12	0.005 or less	3 230	6 320
		10			2 300	3 920
		20			2 300	3 920
TU 86	Rolled screw (2)	10	15	0.05 or less	4 900	9 100
		20			3 900	5 050
	Ground screw (2)	10	15	0.005 or less	6 080	12 500
		20			4 510	7 840
	Ground screw (3)	20	20	0.005 or less	6 620	12 600
TU100	Ground screw	20	20	0.005 or less	6 620	12 600
TU130	Ground screw	25	25	0.005 or less	9 700	19 600

Notes (1) This is not applied to track rail lengths of 990mm and 1,190mm.
(2) This is not applied to track rail lengths of 1,390mm and 1,590mm.
(3) This applies to track rail lengths of 1,390mm and 1,590mm.

Table 12.2 Specifications of ball screw 2

unit: mm

Model and size	Length of track rail	Ball screw type		Shaft dia.	Overall length
TU 25	130	Ground	–	6	146
	165	Ground	–		181
	200	Ground	–		216
TU 30	140	Ground	–	8	156
	180	Ground	–		196
	220	Ground	–		236
	260	Ground	–		276
	300	Ground	–		316
	340	Ground	–		356
TU 40	180	Ground	Rolled	8	158
	240	Ground	Rolled		218
	300	Ground	Rolled		278
	360	Ground	Rolled		338
	420	Ground	Rolled		398
	140	Ground	Rolled		158
	200	Ground	Rolled		218
	260	Ground	Rolled		278
	320	Ground	Rolled		338
	380	Ground	Rolled		398
TU 50	220	Ground	Rolled	10	198
	300	Ground	Rolled		278
	380	Ground	Rolled		358
	460	Ground	Rolled		438
	540	Ground	Rolled		518
	620	Ground	Rolled		598
	700	Ground	Rolled		678
	180	Ground	Rolled		198
	260	Ground	Rolled		278
	340	Ground	Rolled		358
	420	Ground	Rolled		438
	500	Ground	Rolled		518
	580	Ground	Rolled		598
	660	Ground	Rolled		678
TU 60	290	Ground	Rolled	12	263
	390	Ground	Rolled		363
	490	Ground	Rolled		463
	590	Ground	Rolled		563
	690	Ground	Rolled		663
	790	Ground	Rolled		763
	990	–	Rolled		963
	1 190	–	Rolled		1 163
	244	Ground	Rolled		263
	344	Ground	Rolled		363
	444	Ground	Rolled		463
	544	Ground	Rolled		563
	644	Ground	Rolled		663
	744	Ground	Rolled		763
TU 86	490	Ground	Rolled	15	461
	590	Ground	Rolled		561
	690	Ground	Rolled		661
	790	Ground	Rolled		761
	890	Ground	Rolled		861
	990	Ground	Rolled		961
	1 090	Ground	Rolled		1 061
	1 190	Ground	Rolled		1 161
	1 390	Ground	–	20	1 361
	1 590	Ground	–		1 561
	442	Ground	Rolled	15	461
	542	Ground	Rolled		561
	642	Ground	Rolled		661
	742	Ground	Rolled		761
	842	Ground	Rolled		861
	942	Ground	Rolled		961
	1 042	Ground	Rolled		1 061
	1 142	Ground	Rolled		1 161
TU100	1 010	Ground	–	20	972
	1 160	Ground	–		1 122
	1 310	Ground	–		1 272
	1 460	Ground	–		1 422
TU130	1 010	Ground	–	25	972
	1 160	Ground	–		1 122
	1 310	Ground	–		1 272
	1 460	Ground	–		1 422
	1 610	Ground	–		1 572

1N=0.102kgf=0.2248lbs.
1mm=0.03937inch

Table 13 Moment of inertia of sectional area of track rails

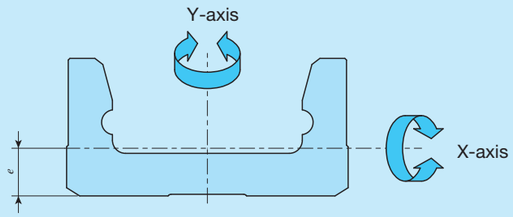

Model and size	Moment of inertia of sectional area mm⁴		Center of gravity
	I_X	I_Y	e mm
TU 25	3.7×10^2	7.5×10^3	2.6
TU 30	9.3×10^2	1.7×10^4	3.3
TU 40	1.0×10^4	6.8×10^4	6.6
TU 50	2.8×10^4	1.7×10^5	8.7
TU 60	6.4×10^4	3.8×10^5	10.9
TU 86	2.4×10^5	1.6×10^6	14.6
TU100	5.9×10^5	3.3×10^6	18.8
TU130	1.4×10^6	8.8×10^6	23.0

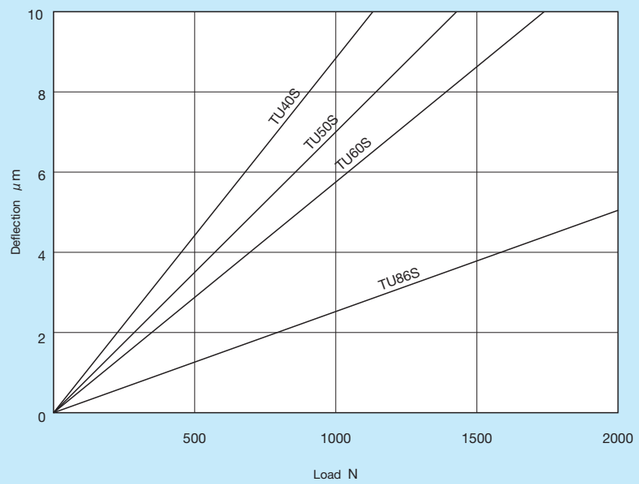

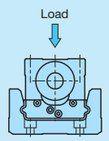

Fig. 1 Deflection vs. Downward load

Table 14.1 Table inertia and starting torque

Model and size	Length of track rail mm	Table inertia J_T $\times10^{-5}$kg·m² Standard table Lead 4mm	Starting torque T_S(2) N·m Ground screw
TU25	130	0.018	0.01
	165	0.021	
	200	0.024	

Model and size	Length of track rail mm	Table inertia J_T (3) $\times10^{-5}$kg·m² Standard table Lead 5mm	Starting torque T_S(2) N·m Ground screw
TU30	140	0.057	0.015
	180	0.069	
	220	0.082	
	260	0.095	
	300	0.107	
	340	0.120	

Model and size	Length of track rail(1) mm	Table inertia J_T (3) $\times10^{-5}$kg·m²						Starting torque T_S(2) N·m			
		Short table		Standard table		Long table		Rolled screw		Ground screw	
		Lead 4mm	Lead 8mm	Lead 4mm	Lead 8mm	Lead 4mm	Lead 8mm	Lead 4mm	Lead 8mm	Lead 4mm	Lead 8mm
TU40	180(140)	0.05	0.07	0.06	0.09	–	–	0.03	0.04	0.03 (0.04)	0.04 (0.05)
	240(200)	0.07	0.09	0.08	0.11	0.08	0.12				
	300(260)	0.09	0.11	0.10	0.12	0.10	0.14				
	360(320)	0.11	0.13	0.12	0.14	0.12	0.16				
	420(380)	0.13	0.15	0.13	0.16	0.14	0.18				

Model and size	Length of track rail(1) mm	Table inertia J_T (3) $\times10^{-5}$kg·m²						Starting torque T_S(2) N·m			
		Short table		Standard table		Long table		Rolled screw		Ground screw	
		Lead 5mm	Lead 10mm	Lead 5mm	Lead 10mm	Lead 5mm	Lead 10mm	Lead 5mm	Lead 10mm	Lead 5mm	Lead 10mm
TU50	220(180)	0.17	0.21	0.18	0.27	–	–	0.04	0.05	0.04 (0.05)	0.05 (0.06)
	300(260)	0.23	0.28	0.24	0.33	0.26	0.40				
	380(340)	0.29	0.34	0.30	0.39	0.32	0.46				
	460(420)	0.35	0.40	0.36	0.45	0.38	0.53				
	540(500)	0.41	0.46	0.43	0.51	0.44	0.59				
	620(580)	0.47	0.52	0.49	0.57	0.51	0.65				
	700(660)	0.54	0.58	0.55	0.63	0.57	0.71				

Model and size	Length of track rail(1) mm	Table inertia J_T (3) $\times10^{-5}$kg·m²									Starting torque T_S(2) N·m			
		Short table			Standard table			Long table			Rolled screw		Ground screw	
		Lead 5mm	Lead 10mm	Lead 20mm	Lead 5mm	Lead 10mm	Lead 20mm	Lead 5mm	Lead 10mm	Lead 20mm	Lead 5mm	Lead 10mm	Lead 5mm 10mm	Lead 20mm
TU60	290(244)	0.45	0.53	1.03	0.47	0.61	1.43	0.49	0.71	1.94	0.08		0.08 (0.09)	0.10 (0.12)
	390(344)	0.60	0.69	1.19	0.62	0.77	1.59	0.65	0.87	2.10				
	490(444)	0.76	0.85	1.34	0.78	0.93	1.75	0.81	1.0	2.26				
	590(544)	0.92	1.0	1.50	0.94	1.1	1.90	0.97	1.2	2.41				
	690(644)	1.1	1.2	1.66	1.1	1.2	2.06	1.1	1.3	2.57				
	790(744)	1.2	1.3	1.82	1.3	1.4	2.22	1.3	1.5	2.73				
	990	1.6	1.7	–	1.6	1.7	–	1.6	1.8	–	0.10		–	
	1 190	1.9	2.0	–	1.9	2.1	–	1.9	2.2	–				

Notes (1) The value in ( ) represents track rail length of motor folding back specification.
(2) When two units of slide table are used, it is about 1.5 times as long as that of one unit, and when table of motor folding back specification is used, it is about twice. The value in ( ) represents starting torque of C-Lube specification.
(3) For motor folding back specification, please add the following value to the value in the table.
TU40 and TU50: 0.17×10^{-5}kg·m², TU60: 0.86×10^{-5}kg·m²

1N=0.102kgf=0.2248lbs.
1mm=0.03937inch

Table 14.2 Table inertia and starting torque

Model and size	Length of track rail (1) mm	Table inertia J_T (3) $\times 10^{-5}$kg·m²						Starting torque T_s (2) N·m			
		Short table		Standard table		Long table		Rolled screw		Ground screw	
		Lead 10mm	Lead 20mm	Lead 10mm	Lead 20mm	Lead 10mm	Lead 20mm	Lead 10mm	Lead 20mm	Lead 10mm	Lead 20mm
TU 86	490(442)	2.1	2.9	2.3	3.9	2.4	4.4	0.10	0.16	0.10 (0.12)	0.16 (0.18)
	590(542)	2.4	3.2	2.7	4.3	2.8	4.8				
	690(642)	2.8	3.6	3.1	4.6	3.2	5.1				
	790(742)	3.2	4.0	3.5	5.0	3.6	5.5				
	890(842)	3.6	4.4	3.9	5.4	4.0	5.9				
	990(942)	4.0	4.8	4.2	5.8	4.4	6.3				
	1 090(1 042)	4.4	5.2	4.6	6.2	4.8	6.7				
	1 190(1 142)	4.8	5.6	5.0	6.6	5.1	7.1				
	1 390	–	18	–	19	–	19	–		–	0.30
	1 590	–	20	–	21	–	22				

Model and size	Length of track rail mm	Table inertia J_T $\times 10^{-5}$kg·m²	Starting torque T_s (2) N·m
		Standard table	
		Lead 20mm	Ground screw
TU100	1 010	15	0.20 (0.26)
	1 160	17	
	1 310	19	
	1 460	20	

Model and size	Length of track rail mm	Table inertia J_T $\times 10^{-5}$kg·m²	Starting torque T_s (2) N·m
		Standard table	
		Lead 25mm	Ground screw
TU130	1 010	39	0.40 (0.50)
	1 160	43	
	1 310	48	
	1 460	52	
	1 610	57	

Notes (1) The value in ( ) represents track rail length of motor folding back specification.
(2) When two units of slide table are used, it is about 1.5 times as long as that of one unit, and when table of motor folding back specification is used, it is about twice. The value in ( ) represents starting torque of C-Lube specification.
(3) For motor folding back specification, please add the following value to the value in the table.
TU86: 0.86×10^{-5}kg·m²

Motor Folding Back Specification

Motor folding back specification is available for Precision Positioning Table TU, space can be saved by folding back the motor and reducing the overall length of the table. For dimensions of motor folding back specification, please refer to respective dimension table.
For motor folding back specification, assembly should be made by customer since "housing applicable to the specified motor, pulley (on motor side and ball screw side), cover, motor bracket, belt and bolts necessary for assembly" are supplied. However, motor mounting bolts should be prepared by customer.
Motor folding back unit can be mounted in 4 directions as indicated in the following figure.

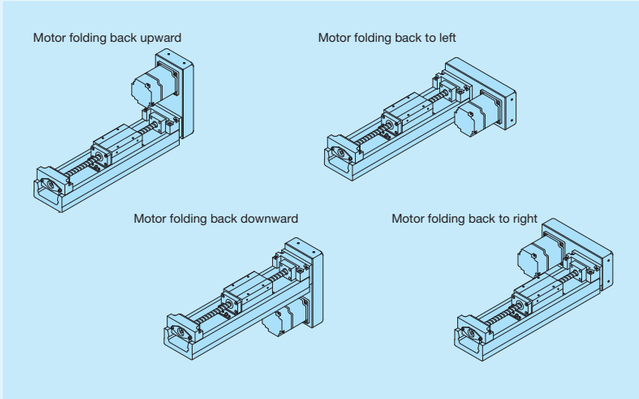

Cover Specification

A bridge cover and bellows are available for Precision Positioning Table TU as a measure for protection against dust.
For the dimensions of table with bellows, please see dimension tables shown in pages of Ⅱ-83 to Ⅱ-84.

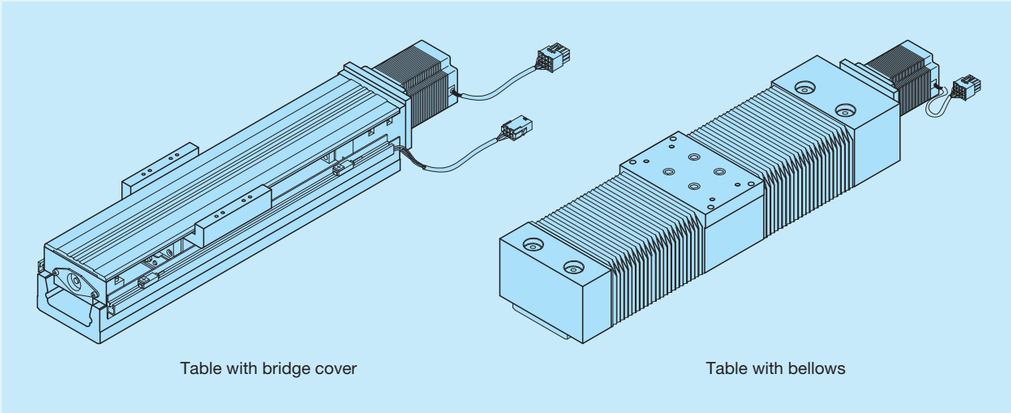

1N=0.102kgf=0.2248lbs.
1mm=0.03937inch

Two Slide Table Specification

Two slide table specification is available for Precision Positioning Table TU. Ball screw nuts are mounted on slide table at the motor side, and it can be driven by the motor (driving table). Ball screw nuts are not mounted on slide table at the opposite motor side, and it is free condition (driven table).
It is possible to make the structure resistant to moment load by using two slide tables in combination (Table 11). When combining slide tables, allow more clearance than "minimum center distance between two slide tables in close contact" described in the dimension table shown in pages Ⅱ-63 to Ⅱ-92 (Enlarging the span will shorten the stroke.).

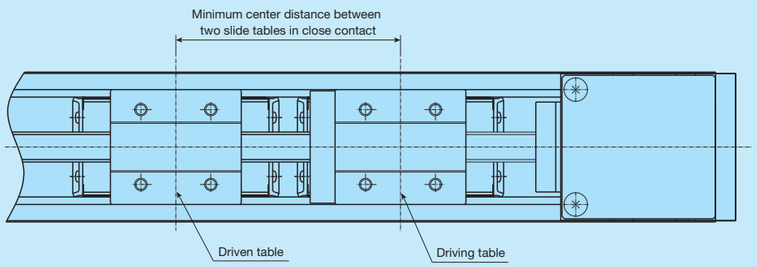

Sensor Specification

Table 15.1 Sensor timing chart (motor inline specification)

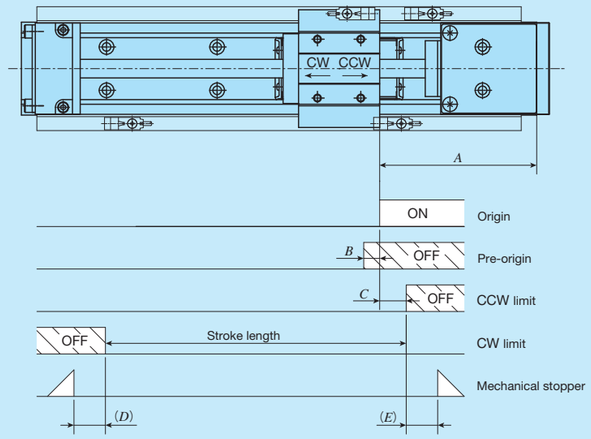

unit: mm

Model and size	Length of slide table	Ball screw lead	A	B	C	D(1)	E
TU 25	Standard	4	50	2	10	8.4(6)	8
TU 30	Standard	5	50	3	10	10.9(6.4)	8
TU 40	Short	4	85	2	10	7.5(5.5)	4.5
		8		6			
	Standard	4	85	2		10.5(8.5)	8
		8		6			
	Long	4	85	2		4.5(7.5)	8
		8		6			
TU 50	Short	5	85	3	10	7.2(6.2)	3.8
		10		7			
	Standard	5	85	3		8.2(7.2)	8
		10		7			
	Long	5	85	3		4.2(3.2)	8
		10		7			
TU 60	Short	5	110	3	20	14.6(19.6)	10.4
		10		7			
		20(2)	130	14		9.6(14.6)	
	Standard	5	100	3		9.6(9.6)	8
		10		7			
		20	105	14			
	Long	5	100	3		9 (8.5)	8
		10		7			
		20	105	14			
TU 86	Short	10	105(3)	7	20	13 (14)	11
		20		14		12 (14)(4)	4
	Standard	10	105	7		13 (14)	11
		20		14		12 (14)	
	Long	10	105	7		13 (14)	11
		20		14		12 (14)	
TU100	Standard	20	150	14	20	22 (19)	20
TU130	Standard	25	160	18	20	18 (23)	20

Notes (1) The value in ( ) indicates the dimension for two slide tables.
(2) After pre-origin signal is turned off, CCW limit is turned on before turned off.
(3) In case of track rail lengths of 1,390mm and 1,590mm, this length is 110mm.
(4) In case of track rail lengths of 1,390mm and 1,590mm, this length is 7 (9)mm.

Remarks 1. Mounting a sensor is specified using the corresponding identification number.
2. For the specifications of respective sensors, please see the section of sensor specification in General Explanation.
3. For tables with bellows, the values in the table are not applied.
4. For tables with C-Lube plate, please see Table 15.3.

1N=0.102kgf=0.2248lbs.
1mm=0.03937inch

Table 15.2 Sensor timing chart (motor folding back specification)

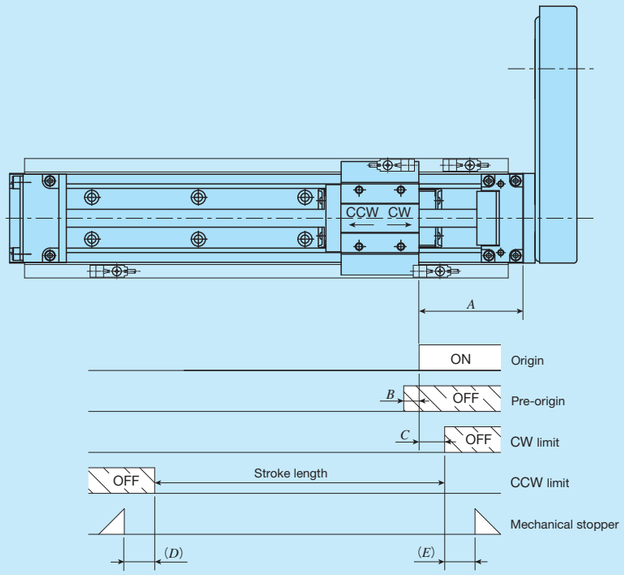

* In a table of motor folding back specification, the movements of CW direction and CCW direction in a slide table become reversed. unit: mm

Size	Length of slide table	Ball screw lead	A	B	C	D(1)	E
TU 40	Short	4	45	2	10	7.5(5.5)	4.5
		8		6			
	Standard	4	45	2		10.5(8.5)	8
		8		6			
	Long	4	45	2		4.5(7.5)	8
		8		6			
TU 50	Short	5	45	3	10	7.2(6.2)	3.8
		10		7			
	Standard	5	45	3		8.2(7.2)	8
		10		7			
	Long	5	45	3		4.2(3.2)	8
		10		7			
TU 60	Short	5	64	3	20	14.6(19.6)	10.4
		10		7			
		20(2)	84	14		9.6(14.6)	
	Standard	5	59	3		9.6(9.6)	8
		10		7			
		20	105	14			
	Long	5	59	3		9 (8.5)	8
		10		7			
		20	105	14			
TU 86	Short	10	62	7	20	13 (14)	11
		20		14		12 (14)	4
	Standard	10	62	7		13 (14)	11
		20		14		12 (14)	
	Long	10	62	7		13 (14)	11
		20		14		12 (14)	

Notes (1) The value in ( ) indicates the dimension for two slide tables.
(2) After pre-origin signal is turned off, CCW limit is turned on before turned off.
Remarks 1. Mounting a sensor is specified using the corresponding identification number.
2. For the specifications of respective sensors, please see the section of sensor specification in General Explanation.
3. For tables with bellows, the values in the table are not applied.
4. For tables with C-Lube plate, please see Table 15.4.

Table 15.3 Sensor timing chart (motor inline specification, with C-Lube)

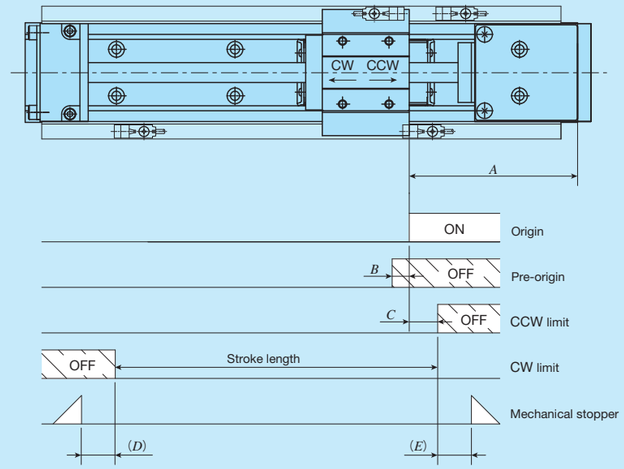

unit: mm

Model and size	Length of slide table	Ball screw lead	A	B	C	D(1)	E
TU 40	Short	4	100	2	10	7.5(5.5)	9
		8		6			
	Standard	4	100	2		5.5(8.5)	9
		8		6			
	Long	4	100	2		9.5(7.5)	9
		8		6			
TU 50	Short	5	100	3	10	7.2(6.2)	8
		10		7			
	Standard	5	100	3		8.2(7.2)	8
		10		7			
	Long	5	100	3		9.2(8.2)	8
		10		7			
TU 60	Short	5	120	3	20	9.6(9.6)	5.4
		10		7			
		20(2)	140	14			
	Standard	5	100	3		4.6(9.6)	8
		10		7			
		20	115	14		9.6(4.6)	5.4
	Long	5	100	3		4 (9)	8
		10		7			
		20	105	14		4 (4)	
TU 86	Short	10	130	7	20	8 (14)	19
		20		14		7 (14)	9
	Standard	10	105	7		13 (9)	11
		20		14		12 (9)	
	Long	10	105	7		8 (9)	11
		20		14		7 (9)	
TU100	Standard	20	150	14	20	17 (14)	20
TU130	Standard	25	160	18	20	18 (23)	20

Notes (1) The value in ( ) indicates the dimension for two slide tables.
(2) After pre-origin signal is turned off, CCW limit is turned on before turned off.
Remarks 1. Mounting a sensor is specified using the corresponding identification number.
2. For the specifications of respective sensors, please see the section of sensor specification in General Explanation.
3. For tables with bellows, the values in the table are not applied.

1N=0.102kgf=0.2248lbs.
1mm=0.03937inch

Table 15.4 Sensor timing chart (motor folding back specification, with C-Lube)

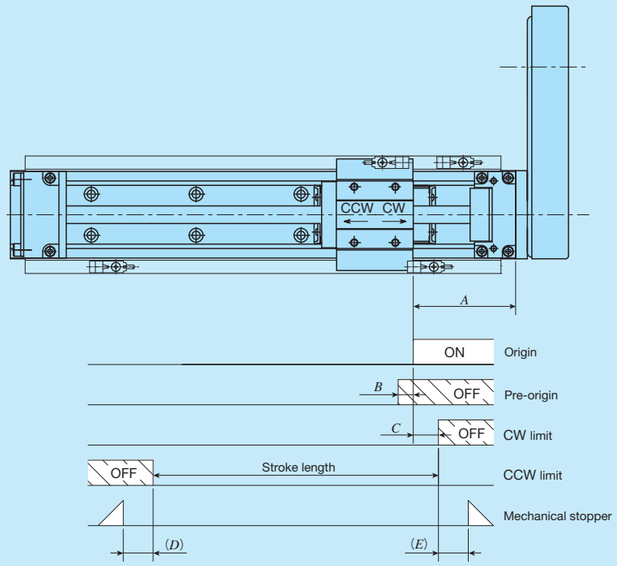

* In a table of motor folding back specification, the movements of CW direction and CCW direction in a slide table becomes reversed. unit: mm

Model and size	Length of slide table	Ball screw lead	A	B	C	D(1)	E
TU 40	Short	4	60	2	10	7.5(5.5)	9
		8		6			
	Standard	4	60	2		5.5(8.5)	9
		8		6			
	Long	4	60	2		9.5(7.5)	9
		8		6			
TU 50	Short	5	60	3	10	7.2(6.2)	8
		10		7			
	Standard	5	60	3		8.2(7.2)	8
		10		7			
	Long	5	60	3		9.2(8.2)	8
		10		7			
TU 60	Short	5	75	3	20	8.6(8.6)	6.4
		10		7			
		20(2)	94	14		9.6(9.6)	5.4
	Standard	5	60	3		8.6(3.6)	9
		10		7			
		20	69	14		9.6(4.6)	5.4
	Long	5	60	3		8 (3)	9
		10		7			
		20	59	14		4 (4)	8
TU 86	Short	10	90	7	20	10 (6)	22
		20		14		9 (6)	12
	Standard	10	60	7		10 (6)	9
		20		14		9 (6)	
	Long	10	60	7		5 (6)	9
		20		14		4 (6)	

Notes (1) The dimension in ( ) represents dimensions for two slide tables.
(2) After pre-origin signal is turned off, CCW limit is turned on before turned off.

Remarks 1. Mounting a sensor is specified using the corresponding identification number.
2. For the specifications of respective sensors, please see the section of sensor specification in General Explanation.
3. For tables with bellows, the values in the table are not applied.

Dimensions of Motor Attachment

■ Motor inline specification

TU25

AT100 (without attachment)

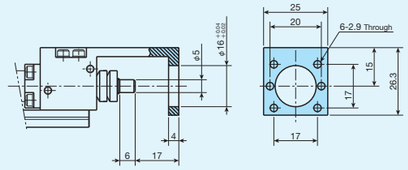

AT101

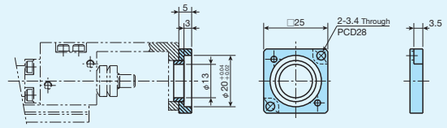

AT109

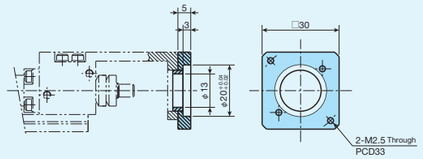

AT125

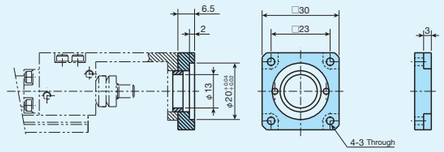

TU30

AT100 (without attachment)

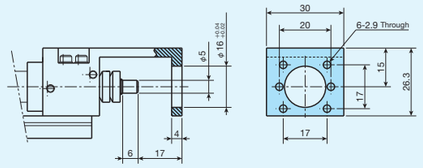

AT101

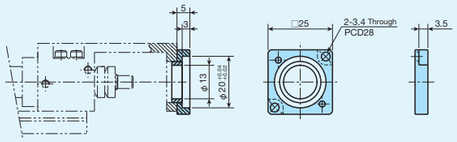

AT109

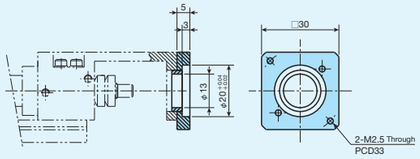

AT125

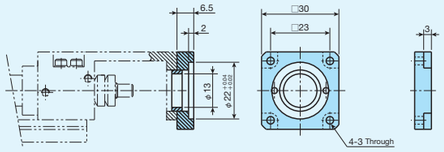

TU40

AT100 (without attachment)

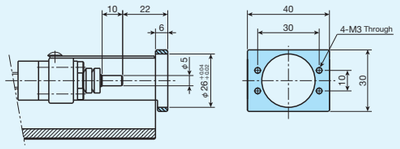

AT102

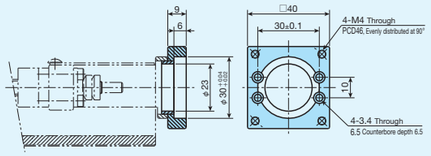

AT110

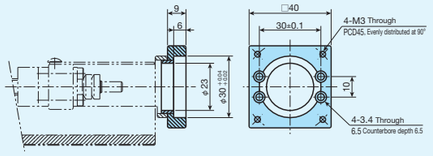

AT117
AT122

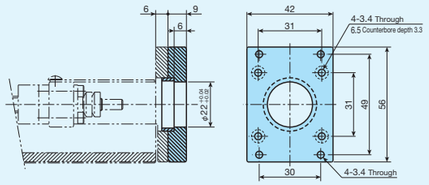

TU50

AT100 (without attachment)

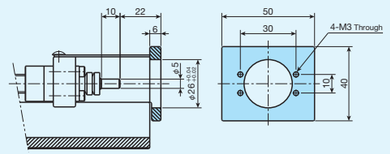

AT102

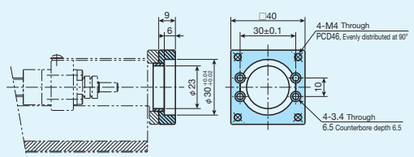

AT110

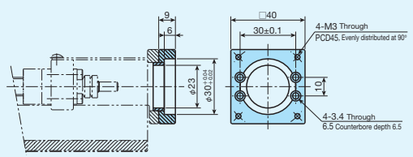

AT117
AT122

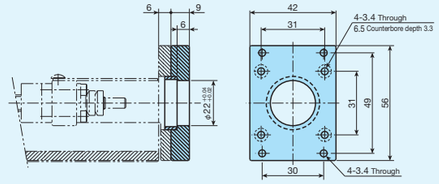

1N=0.102kgf=0.2248lbs.
1mm=0.03937inch

TU60

AT100 (without attachment)

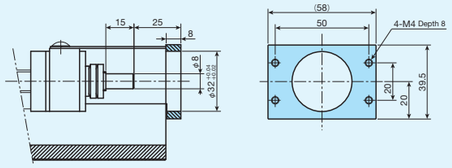

AT111

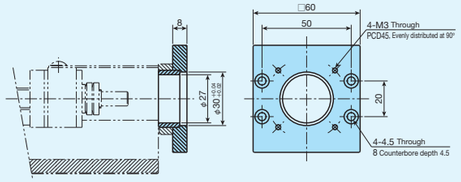

AT103

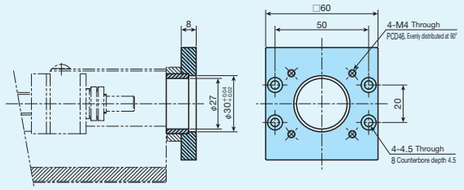

AT112

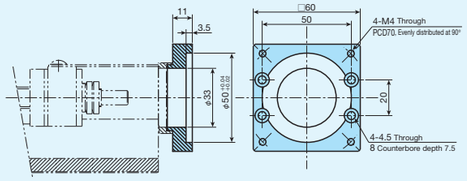

AT104

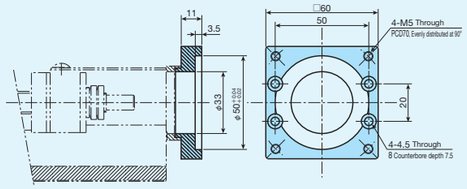

AT118
AT123

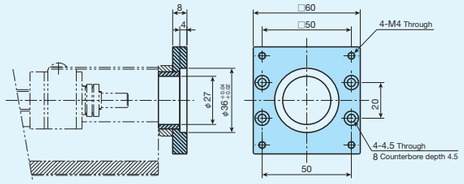

TU86

AT100 (without attachment)

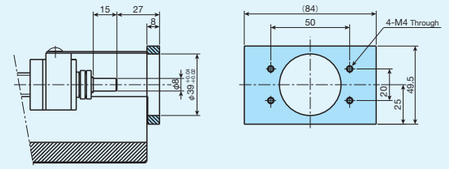

AT113

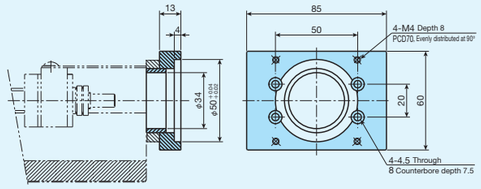

AT105

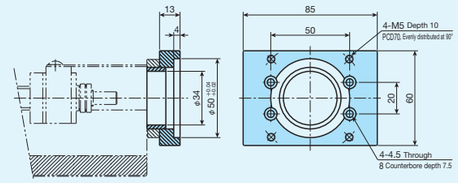

AT114

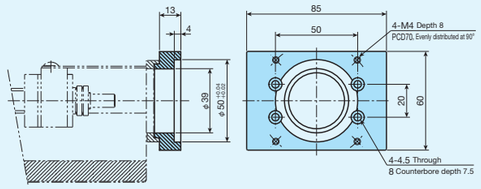

AT106

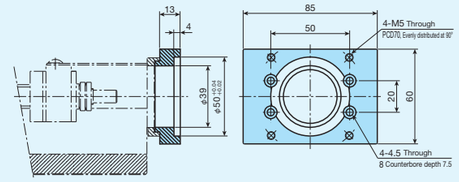

AT119
AT124

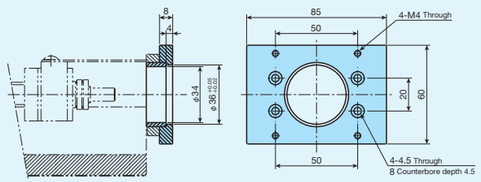

TU100

AT100 (without attachment)

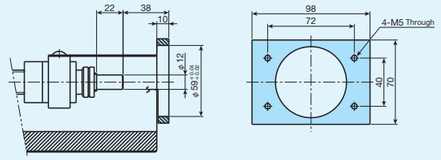

AT107

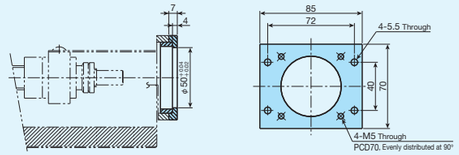

AT115

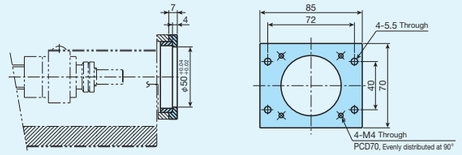

AT120

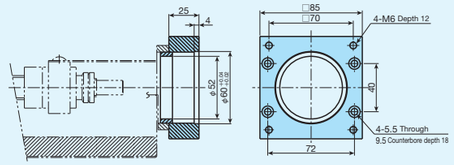

TU130

AT100 (without attachment)

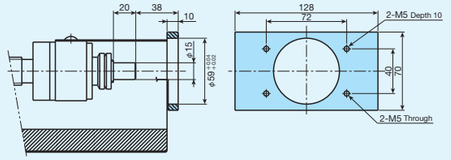

AT108

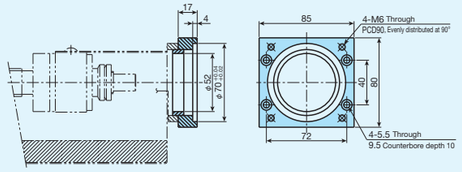

AT116

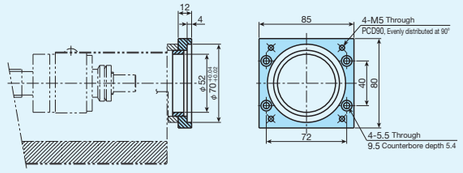

AT121

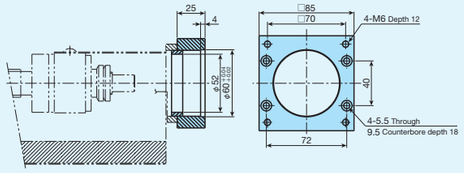

TU

1N=0.102kgf=0.2248lbs.
1mm=0.03937inch

■ Motor folding back specification

TU40

AR100
(without attachment)

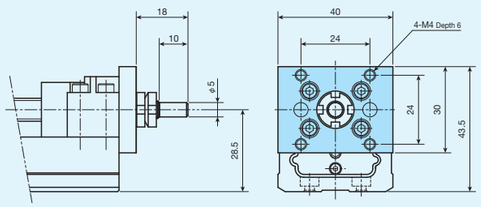

TU50

AR100
(without attachment)

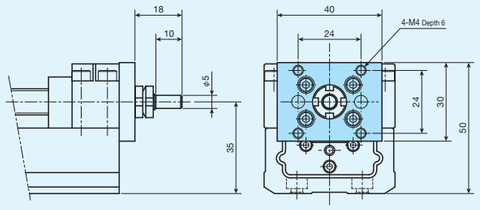

TU40, TU50

AR101

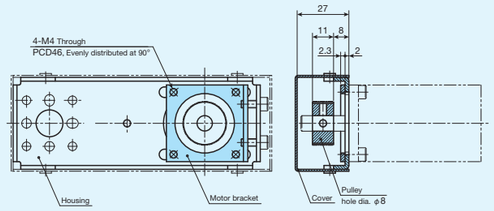

AR105

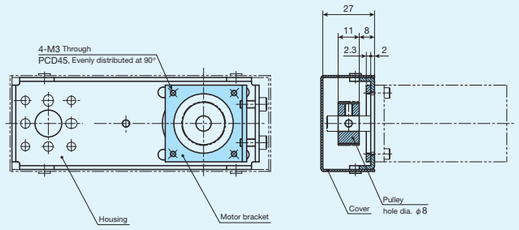

AR109

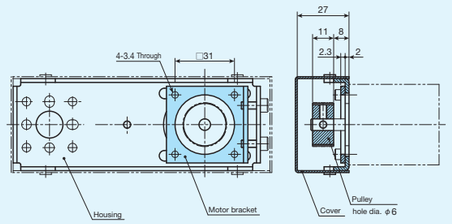

AR110

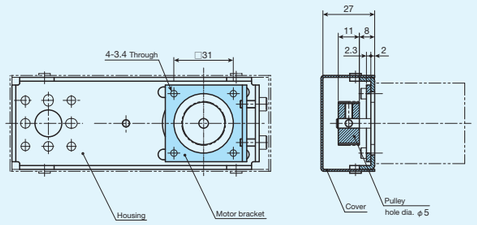

TU60

AR100
(without attachment)

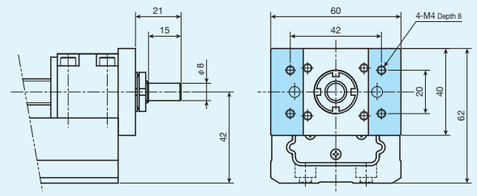

AR102

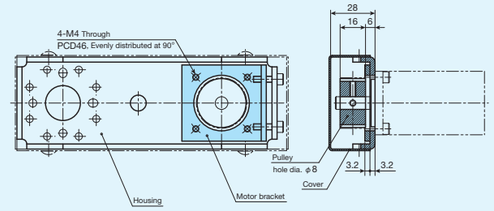

AR103

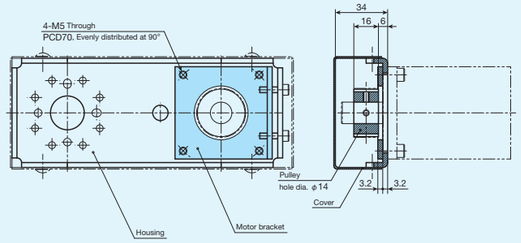

AR106

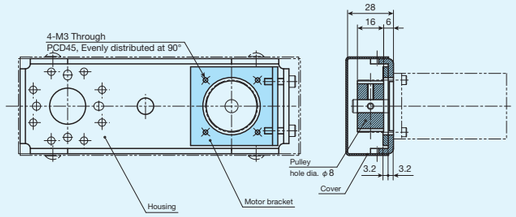

AR107

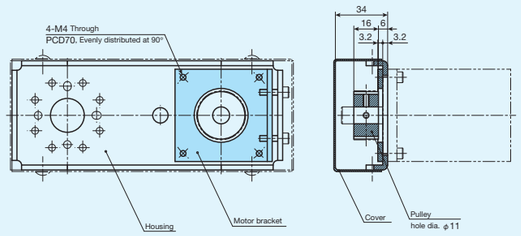

TU86

AR100
(without attachment)

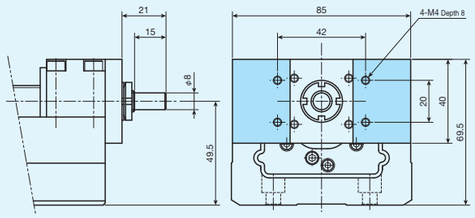

AR104

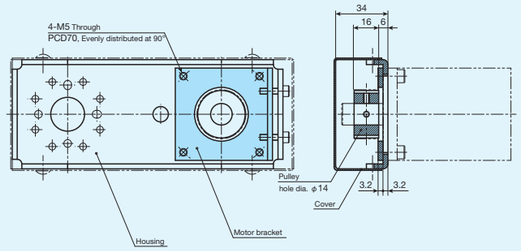

AR108

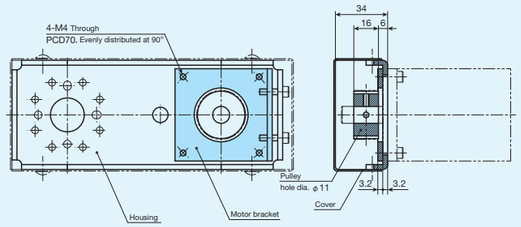

TU

1N=0.102kgf=0.2248lbs.
1mm=0.03937inch

Example of Combination

In Precision Positioning Table TU, using XY bracket enables you to configure various two-axis combination. Light aluminum alloy-made XY bracket can be mounted to a flange type standard table. Table 16 shows various XY bracket models. If you are interested, please specify the model number of your desired model from the table.

Table 16 Configuration of two-axis combination and XY bracket models

Combination by use of XY bracket			Combination possible without the bracket		
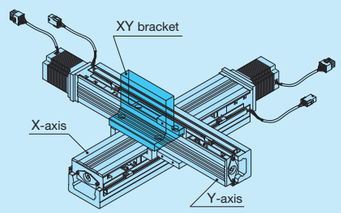			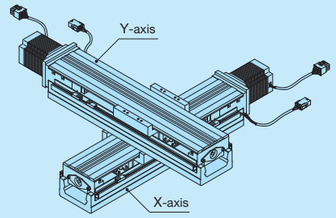		
X-axis	Y-axis	Model number of XY bracket	X-axis	Y-axis	Model number of XY bracket
–	–	–	TU 25F	TU 25	Not required
–	–	–	TU 30F	TU 30	Not required
TU 40F	TU 40	TAE0412-BR	–	–	–
TU 50F	TU 40	TAE0413-BR	–	–	–
TU 50F	TU 50	TAE0414-BR	–	–	–
TU 60F	TU 50	TAE0415-BR	–	–	–
TU 60F	TU 60	TAE0409-BR	–	–	–
TU 86F	TU 60	TAE0410-BR	TU 86F	TU 60	Not required
TU 86F	TU 86	TAE0411-BR	TU 86F	TU 86	Not required
–	–	–	TU130F	TU100	Not required

Table 17.1 Dimensions of XY bracket

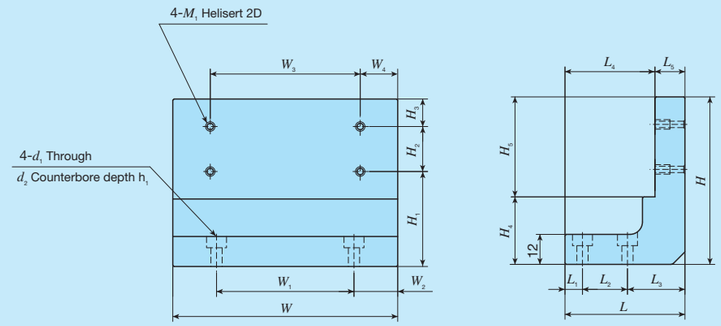

unit: mm

Model number	W	W_1	W_2	W_3	W_4	H	H_1	H_2	H_3	H_4	H_5	L	L_1	L_2	L_3	L_4	L_5	M_1	d_1	d_2	h_1
TAE0412-BR	90	55	17.5	60	15	67	38	18	11	27	40	48	7	18	23	36	12	M3	4.5	8	4.5
TAE0413-BR	90	65	12.5	60	15	67	38	18	11	27	40	51	9	25	17	39	12	M3	4.5	8	4.5
TAE0414-BR	90	65	12.5	80	5	77	39.5	25	12.5	27	50	57	9	25	23	45	12	M4	4.5	8	4.5

Table 17.2 Dimensions of XY bracket

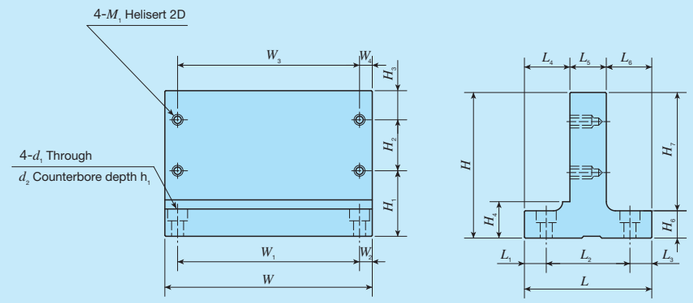

unit: mm

Model number	W	W_1	W_2	W_3	W_4	H	H_1	H_2	H_3	H_4	H_6	H_7	L	L_1	L_2	L_3	L_4	L_5	L_6	M_1	d_1	d_2	h_1
TAE0415-BR	114	74	20	80	17	70	32.5	25	12.5	20	15	55	52.4	12.2	28	12.2	19.2	15	18.2	M4	5.5	9.5	5.5
TAE0409-BR	114	74	20	100	7	80	36	28	16	20	15	65	52.4	12.2	28	12.2	19.2	15	18.2	M5	5.5	9.5	5.5
TAE0410-BR	114	100	7	100	7	80	36	28	16	20	15	65	70	12	46	12	25	20	25	M5	6.6	11	6.5
TAE0411-BR	114	100	7	100	7	106	40	46	20	20	15	91	73	13.5	46	13.5	26.5	20	26.5	M6	6.6	11	6.5

1N=0.102kgf=0.2248lbs.
1mm=0.03937inch

TU25

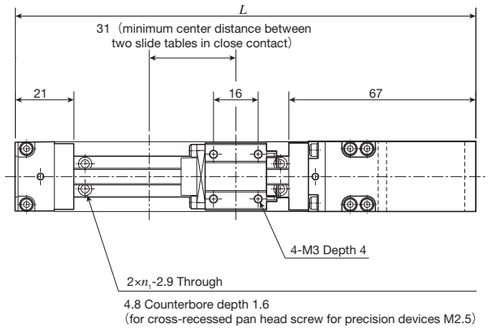

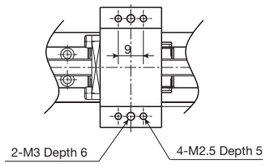

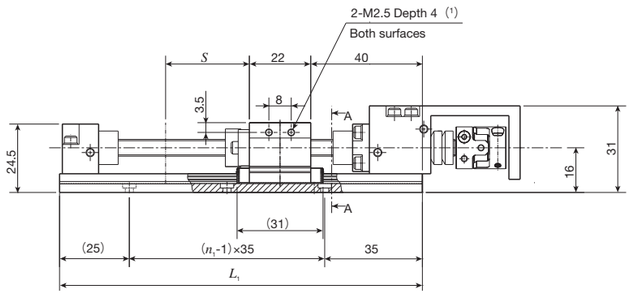

A-A Sectional dimension

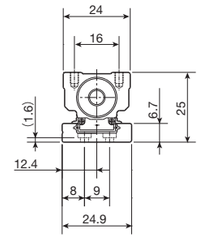

TU25S

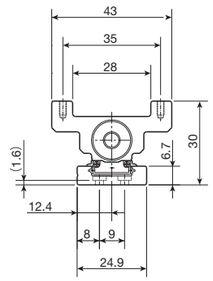

TU25F

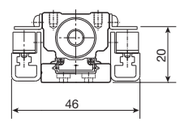

With sensor

Note (1) No thread hole is prepared for TU25F.

Dimensions unit: mm

Model and size	Length of track rail L_1	Overall length L	Stroke length S (1)	n_1	Mass of slide table kg	Mass (2) kg
TU25S	130	165	30(−)	3	0.05	0.31
	165	200	65(45)	4		0.34
	200	235	100(80)	5		0.38
TU25F	130	165	30(−)	3	0.07	0.33
	165	200	65(45)	4		0.36
	200	235	100(80)	5		0.40

Notes (1) The value indicates the allowable stroke length when limit sensors are mounted. The value in ( ) represents dimension for two slide tables in close contact.
(2) The value shows the mass of the entire table with one slide table.
Remark: The material of track rail and casing is stainless steel.

TU30

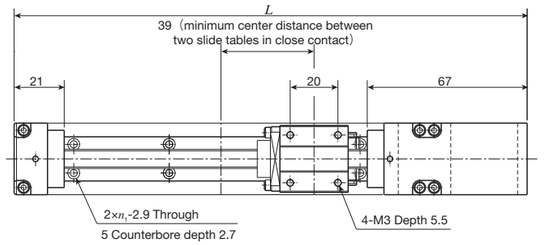

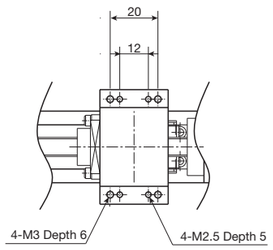

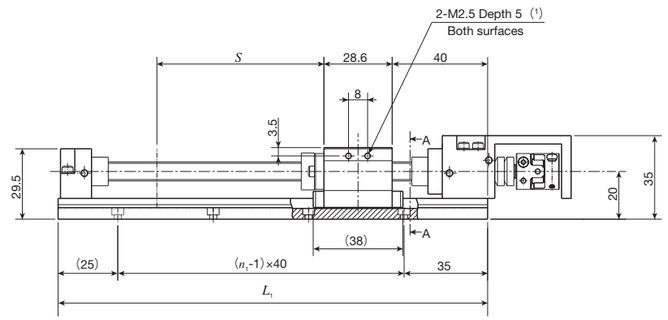

A-A Sectional dimension

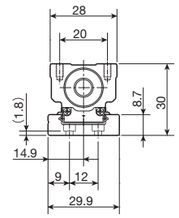

TU30S

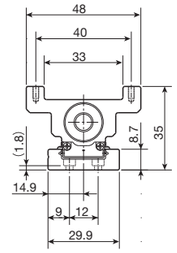

TU30F

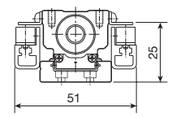

With sensor

Note (1) No thread hole is prepared for TU30F.

Dimensions unit: mm

Model and size	Length of track rail L_1	Overall length L	Stroke length S (1)	n_1	Mass of slide table kg	Mass (2) kg
TU30S	140	175	30(−)	3	0.09	0.49
	180	215	70(45)	4		0.56
	220	255	110(85)	5		0.63
	260	295	150(125)	6		0.70
	300	335	190(165)	7		0.77
	340	375	230(205)	8		0.84
TU30F	140	175	30(−)	3	0.12	0.52
	180	215	70(45)	4		0.59
	220	255	110(85)	5		0.66
	260	295	150(125)	6		0.73
	300	335	190(165)	7		0.80
	340	375	230(205)	8		0.87

Notes (1) The value indicates the allowable stroke length when limit sensors are mounted. The value in ( ) represents dimension for two slide tables in close contact.
(2) The value shows the mass of the entire table with one slide table.
Remark: The material of track rail and casing is stainless steel.

1N=0.102kgf=0.2248lbs.
1mm=0.03937inch

TU40

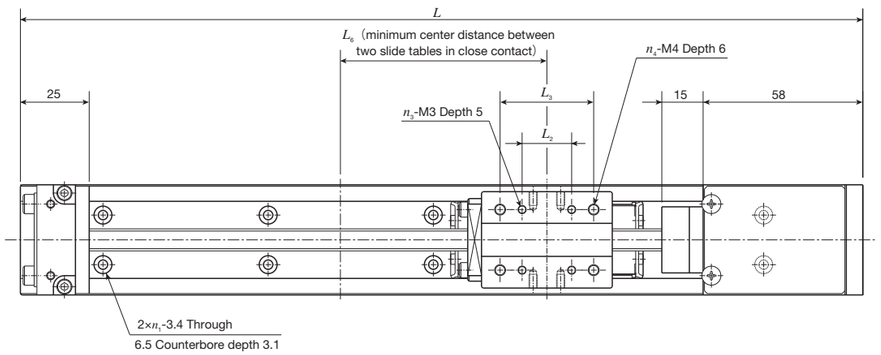

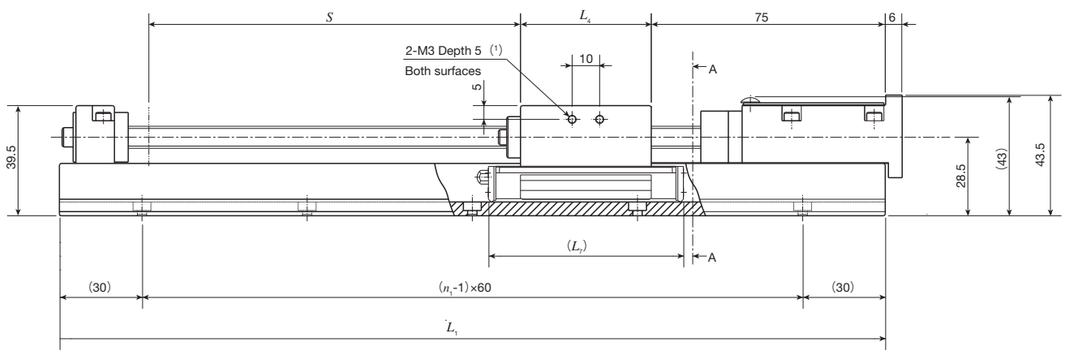

A-A Sectional dimension

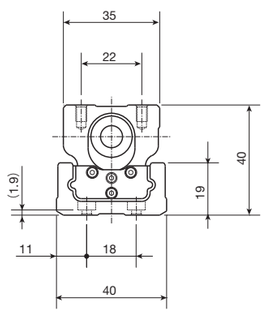

TU40C, TU40S, TU40G

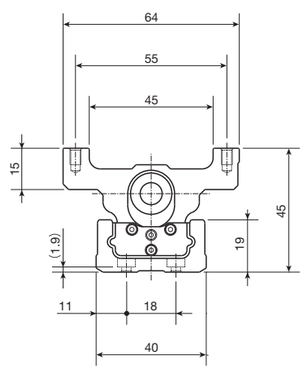

TU40F

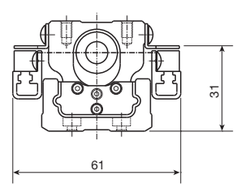

With sensor

Note (1) No thread hole is prepared for TU40F.

Dimensions of slide table

unit: mm

Model and size	L_2	L_3	L_4	L_6	L_7	n_3	n_4	Mass kg
TU40C	–	–	19.5	45	43	–	2	0.1
TU40S	–	18	31.5	60	55	–	4	0.2
TU40G	18	34	47.5	75	71	4	4	0.3
TU40F	–	18	31.5	60	55	–	4	0.3

Dimensions of track rail

unit: mm

Length of track rail L_1	Overall length L	n_1	Stroke length S(1)			Mass (2) kg			
			TU40C	TU40S TU40F	TU40G	TU40C	TU40S	TU40G	TU40F
180	186	3	45(–)	30(–)	– (–)	0.9	1.0	–	1.1
240	246	4	105(70)	90(40)	80(–)	1.1	1.2	1.3	1.3
300	306	5	165(130)	150(100)	140(70)	1.2	1.3	1.4	1.4
360	366	6	225(190)	210(160)	200(130)	1.4	1.5	1.6	1.6
420	426	7	285(250)	270(220)	260(190)	1.6	1.7	1.8	1.8

Notes (1) The value indicates the allowable stroke length when limit sensors are mounted. The value in ( ) represents dimension for two slide tables in close contact.
(2) The value shows the mass of the entire table with one slide table.

1N=0.102kgf=0.2248lbs.
1mm=0.03937inch

TU50

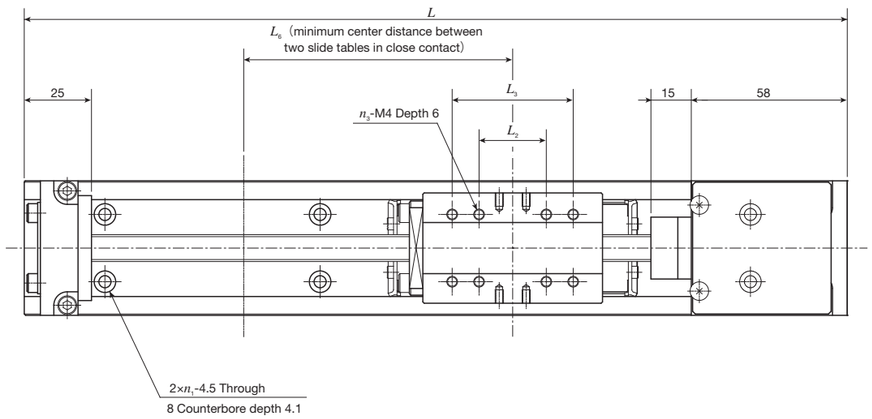

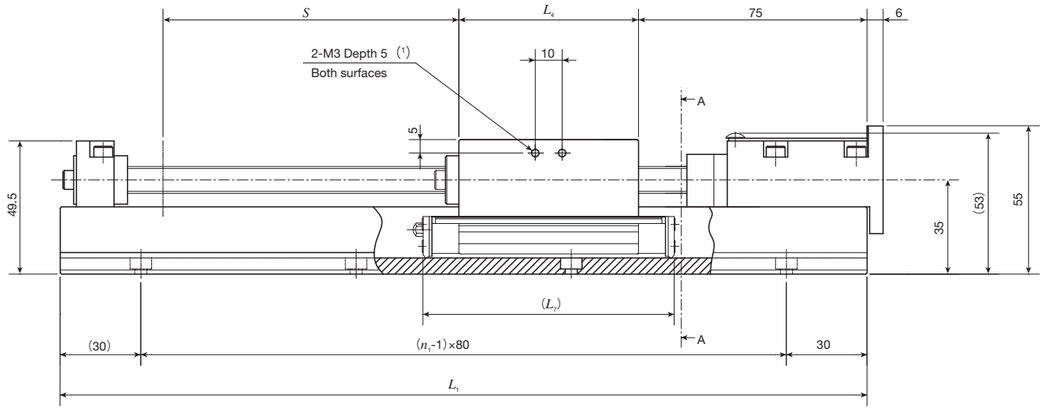

A-A Sectional dimension

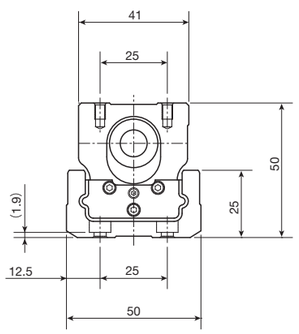

TU50C, TU50S, TU50G

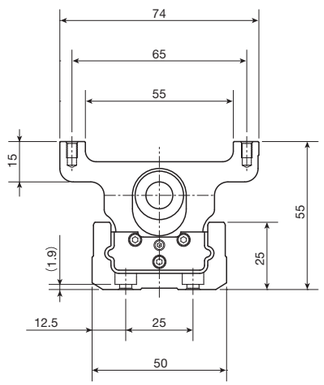

TU50F

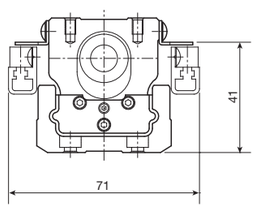

With sensor

Note (1) No thread hole is prepared for TU50F.

Dimensions of slide table

unit: mm

Model and size	L_2	L_3	L_4	L_6	L_7	n_3	Mass kg
TU50C	–	–	23.8	55	51	2	0.2
TU50S	25	–	42.8	75	70	4	0.4
TU50G	25	45	66.8	100	94	8	0.7
TU50F	25	–	42.8	75	70	4	0.5

Dimensions of track rail

unit: mm

Length of track rail L_1	Overall length L	n_1	Stroke length S(1)			Mass(2) kg			
			TU50C	TU50S TU50F	TU50G	TU50C	TU50S	TU50G	TU50F
220	226	3	80(–)	60(–)	– (–)	1.6	1.8	–	1.9
300	306	4	160(115)	140(75)	120(–)	1.9	2.1	2.4	2.2
380	386	5	240(195)	220(155)	200(110)	2.3	2.5	2.8	2.6
460	466	6	320(275)	300(235)	280(190)	2.7	2.9	3.2	3.0
540	546	7	400(355)	380(315)	360(270)	3.1	3.3	3.6	3.4
620	626	8	480(435)	460(395)	440(350)	3.5	3.7	3.9	3.8
700	706	9	560(515)	540(475)	520(430)	3.8	4.0	4.3	4.1

Notes (1) The value indicates the allowable stroke length when limit sensors are mounted. The value in ( ) represents dimension for two slide tables in close contact.
(2) The value shows the mass of the entire table with one slide table.

1N=0.102kgf=0.2248lbs.
1mm=0.03937inch

TU60

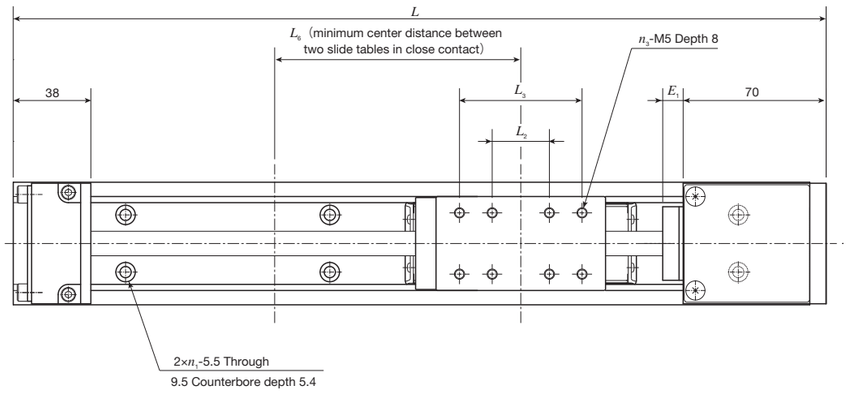

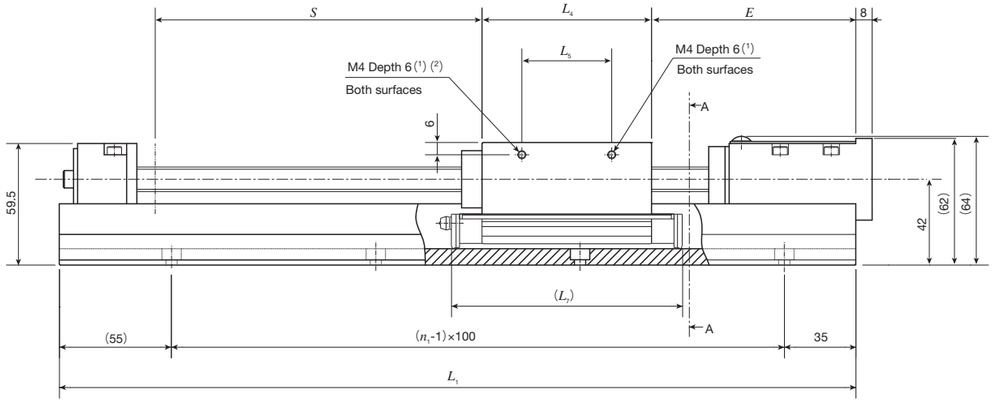

A-A Sectional dimension

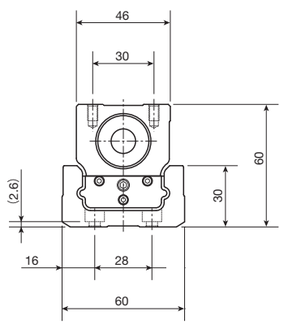

TU60C, TU60S, TU60G

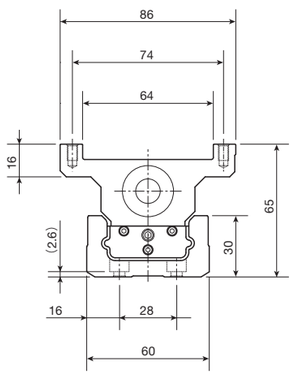

TU60F

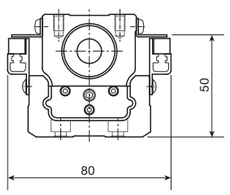

With sensor

Notes (1) No thread hole is prepared for TU60FC, TU60F, TU60FG.
(2) TU60C is ϕ3 depth 2.

<Ball screw lead 5mm, 10mm>

Dimensions of slide table unit: mm

Model and size	L_2	L_3	L_4	L_5	L_6	L_7	n_3	E	E_1	Mass kg
TU60C	–	–	27.4	17.4	65	58	2	90	15	0.3
TU60S	28	–	52.4	18	90	83	4	80	10	0.6
TU60G	28	60	83	44	120.5	113	8	80	10	1.0
TU60FC	–	–	27.4	–	65	58	2	90	15	0.4
TU60F	28	–	52.4	–	90	83	4	80	10	0.8
TU60FG	28	60	83	–	120.5	113	8	80	10	1.3

Dimensions of track rail unit: mm

Length of track rail L_1	Overall length L	n_1	Stroke length S (1)			Mass (2) kg					
			TU60C TU60FC	TU60S TU60F	TU60G TU60FG	TU60C	TU60S	TU60G	TU60FC	TU60F	TU60FG
290	298	3	110(50)	100(–)	70(–)	3.0	3.3	3.6	3.1	3.5	3.9
390	398	4	210(150)	200(120)	170(60)	3.7	4.0	4.4	3.8	4.2	4.7
490	498	5	310(250)	300(220)	270(160)	4.5	4.8	5.1	4.6	4.9	5.4
590	598	6	410(350)	400(320)	370(260)	5.2	5.5	5.8	5.3	5.7	6.1
690	698	7	510(450)	500(420)	470(360)	6.0	6.2	6.6	6.1	6.4	6.9
790	798	8	610(550)	600(520)	570(460)	6.7	7.0	7.3	6.8	7.2	7.6
990	998	10	810(750)	800(720)	770(660)	8.3	8.6	9.0	8.4	8.7	9.1
1190	1198	12	1 010(950)	1 000(920)	970(860)	9.8	10.1	10.5	9.9	10.2	10.6

Notes (1) The value indicates the allowable stroke length when limit sensors are mounted. The value in ( ) represents dimension for two slide tables in close contact.
(2) The value shows the mass of the entire table with one slide table.

<Ball screw lead 20mm>

Dimensions of slide table unit: mm

Model and size	L_2	L_3	L_4	L_5	L_6	L_7	n_3	E	E_1	Mass kg
TU60C	–	–	27.4	17.4	65	58	2	110	15	0.3
TU60S	28	–	52.4	18	90	83	4	85	15	0.6
TU60G	28	60	83	44	120.5	113	8	85	15	1.0
TU60FC	–	–	27.4	–	65	58	2	110	15	0.4
TU60F	28	–	52.4	–	90	83	4	85	15	0.8
TU60FG	28	60	83	–	120.5	113	8	85	15	1.3

Dimensions of track rail unit: mm

Length of track rail L_1	Overall length L	n_1	Stroke length S (1)			Mass (2) kg					
			TU60C TU60FC	TU60S TU60F	TU60G TU60FG	TU60C	TU60S	TU60G	TU60FC	TU60F	TU60FG
290	298	3	95(–)	95(–)	65(–)	3.1	3.4	3.7	3.2	3.6	4.0
390	398	4	195(135)	195(115)	165(–)	3.8	4.1	4.5	3.9	4.3	4.8
490	498	5	295(235)	295(215)	265(155)	4.6	4.9	5.2	4.7	5.0	5.5
590	598	6	395(335)	395(315)	365(255)	5.3	5.6	5.9	5.4	5.8	6.2
690	698	7	495(435)	495(415)	465(355)	6.1	6.3	6.7	6.2	6.5	7.0
790	798	8	595(535)	595(515)	565(455)	6.8	7.1	7.4	6.9	7.3	7.7

Notes (1) The value indicates the allowable stroke length when limit sensors are mounted. The value in ( ) represents dimension for two slide tables in close contact.
(2) The value shows the mass of the entire table with one slide table.

1N=0.102kgf=0.2248lbs.
1mm=0.03937inch

TU86

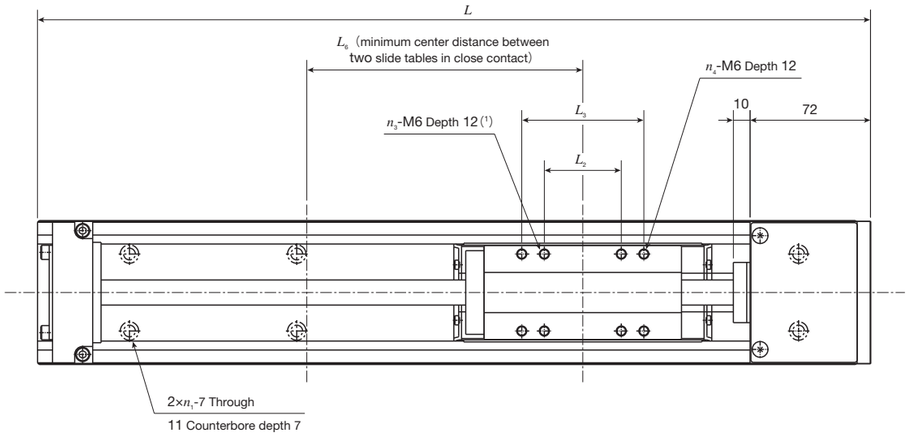

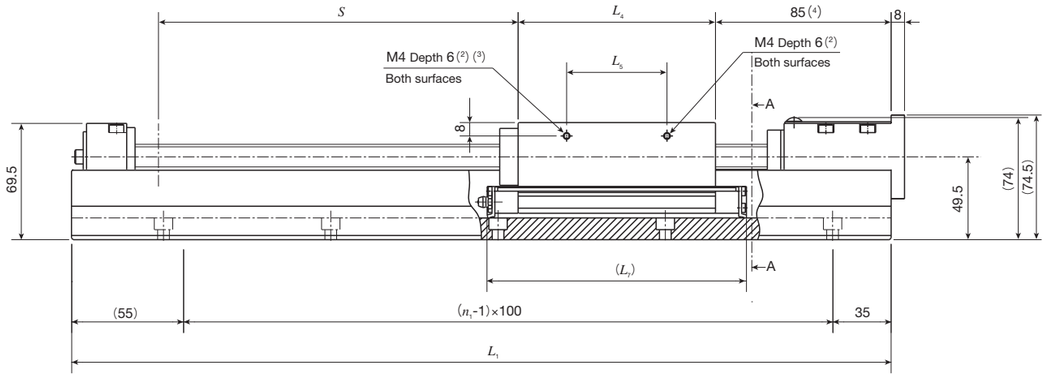

A-A Sectional dimension

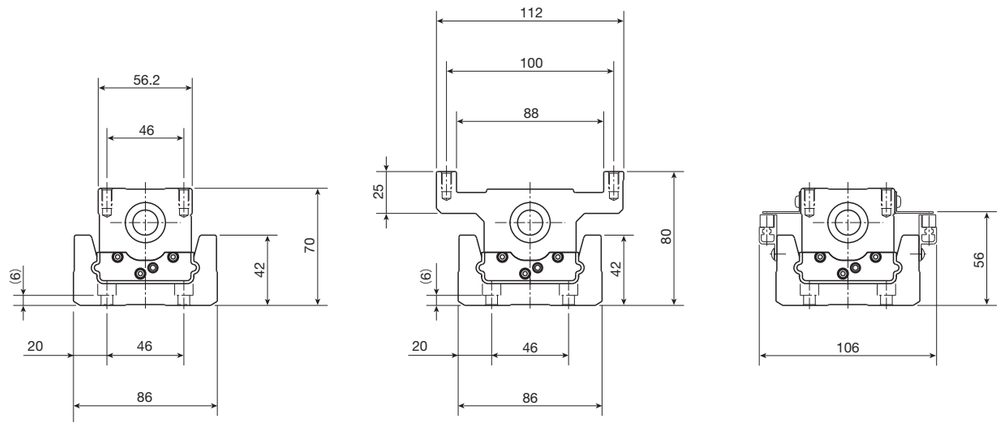

TU86C, TU86S, TU86G | TU86F | With sensor

Notes (1) TU86F is M5 depth 12.
(2) No thread hole is prepared for TU86FC, TU86F, TU86FG.
(3) TU86C is ϕ3 depth 2.
(4) If the track rail length for TU86C and TU86FC is 1,390 or 1,590, the height is 90.

Dimensions of slide table

unit: mm

Model and size	L_2	L_3	L_4	L_5	L_6	L_7	n_3	n_4	Mass kg
TU86C	–	–	43	30	90	80	2	–	0.7
TU86S	46	–	93	63	140	130	4	–	1.7
TU86G	46	73	118	60	165	155	4	4	2.2
TU86FC	–	–	43	–	90	80	2	–	1.1
TU86F	28	46	93	–	140	130	4	4	2.3
TU86FG	46	73	118	–	165	155	4	4	3.0

Dimensions of track rail

unit: mm

Length of track rail L_1	Overall length L	n_1	Stroke length S (1)			Mass (2) kg					
			TU86C TU86FC	TU86S TU86F	TU86G TU86FG	TU86C	TU86S	TU86G	TU86FC	TU86F	TU86FG
490	498	5	300(220)	250(120)	225(70)	9.9	10.9	11.4	10.3	11.5	12.2
590	598	6	400(320)	350(220)	325(170)	10.8	11.7	12.2	11.2	12.4	13.0
690	698	7	500(420)	450(320)	425(270)	12.3	13.2	13.8	12.7	13.9	14.6
790	798	8	600(520)	550(420)	525(370)	13.8	14.7	15.3	14.2	15.4	16.1
890	898	9	700(620)	650(520)	625(470)	15.0	15.9	16.4	15.4	16.6	17.2
990	998	10	800(720)	750(620)	725(570)	16.5	17.4	17.9	16.9	18.1	18.7
1090	1 098	11	900(820)	850(720)	825(670)	18.0	18.9	19.4	18.4	19.6	20.2
1190	1 198	12	1 000(920)	950(820)	925(770)	19.5	20.4	21.0	19.9	21.1	21.8
1390	1 398	14	1 200(1 120)	1 150(1 020)	1 125(970)	24.5	25.4	25.9	24.9	26.0	26.7
1590	1 598	16	1 400(1 320)	1 350(1 220)	1 325(1 170)	27.8	28.7	29.2	28.2	29.3	30.0

Notes (1) The value indicates the allowable stroke length when limit sensors are mounted. The value in ( ) represents dimension for two slide tables in close contact.
(2) The value shows the mass of the entire table with one slide table.

1N=0.102kgf=0.2248lbs.
1mm=0.03937inch

TU100

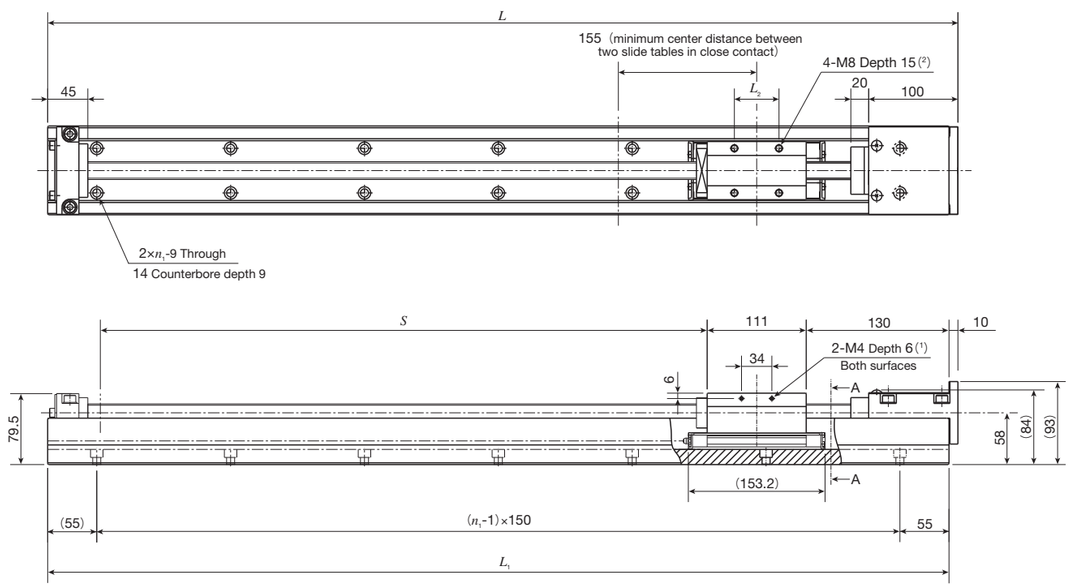

A-A Sectional dimension

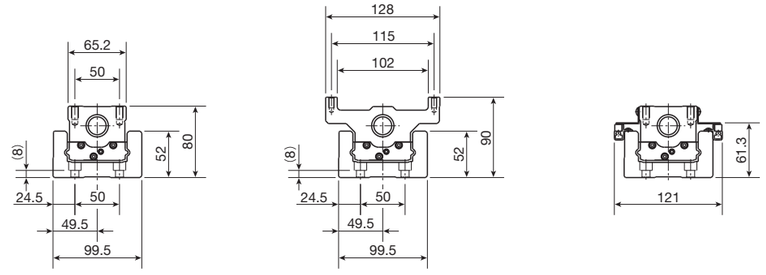

TU100S TU100F With sensor

Notes (1) No thread hole is prepared for TU100F.
(2) TU100F is M6 depth 12.
Remark: M12 female threads for hanging bolt are provided on the track rail.

Dimensions unit: mm

Model and size	Length of track rail L_1	Overall length L	Stroke length S (1)	n_1	L_2	Mass of slide table kg	Mass (2) kg
TU100S	1 010	1 020	690(550)	7	50	2.6	28.0
	1 160	1 170	840(700)	8			31.6
	1 310	1 320	990(850)	9			35.1
	1 460	1 470	1 140(1 000)	10			38.8
TU100F	1 010	1 020	690(550)	7	46	3.7	29.1
	1 160	1 170	840(700)	8			32.7
	1 310	1 320	990(850)	9			36.2
	1 460	1 470	1 140(1 000)	10			39.9

Notes (1) The value indicates the allowable stroke length when limit sensors are mounted. The value in ( ) represents dimension for two slide tables in close contact.
(2) The value shows the mass of the entire table with one slide table.

TU130

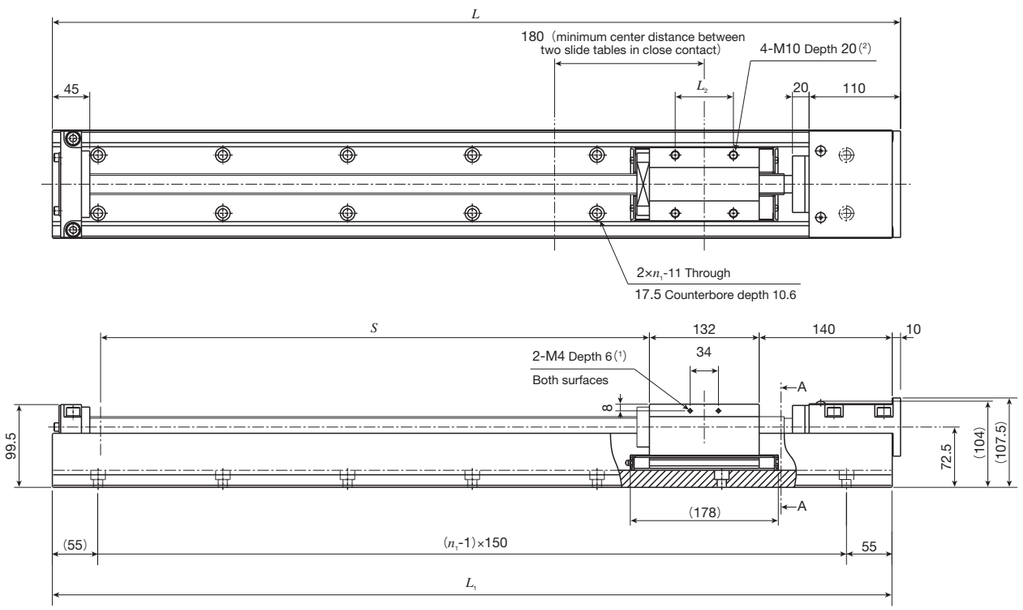

A-A Sectional dimension

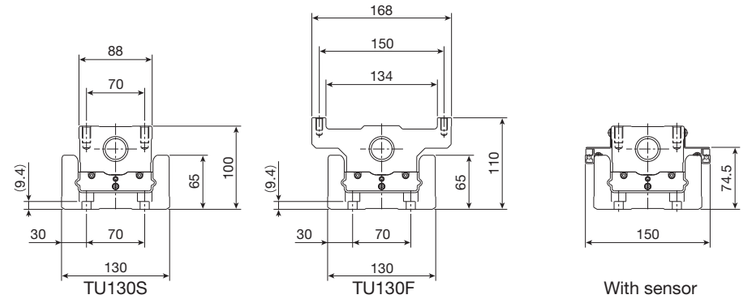

TU130S TU130F With sensor

Notes (1) No thread hole is prepared for TU130F.
(2) TU130F is M8 depth 15.
Remark: M12 female threads for hanging bolt are provided on the track rail.

Dimensions unit: mm

Model and size	Length of track rail L_1	Overall length L	Stroke length S (1)	n_1	L_2	Mass of slide table kg	Mass (2) kg
TU130S	1 010	1 020	660(490)	7	70	5.4	45.2
	1 160	1 170	810(640)	8			50.6
	1 310	1 320	960(790)	9			56.2
	1 460	1 470	1 110(940)	10			61.8
	1 610	1 620	1 260(1 090)	11			67.3
TU130F	1 010	1 020	660(490)	7	50	7.8	47.6
	1 160	1 170	810(640)	8			53.0
	1 310	1 320	960(790)	9			58.6
	1 460	1 470	1 110(940)	10			64.2
	1 610	1 620	1 260(1 090)	11			69.7

Notes (1) The value indicates the allowable stroke length when limit sensors are mounted. The value in ( ) represents dimension for two slide tables in close contact.
(2) The value shows the mass of the entire table with one slide table.

1N=0.102kgf=0.2248lbs.
1mm=0.03937inch

TU40 Motor folding back specification

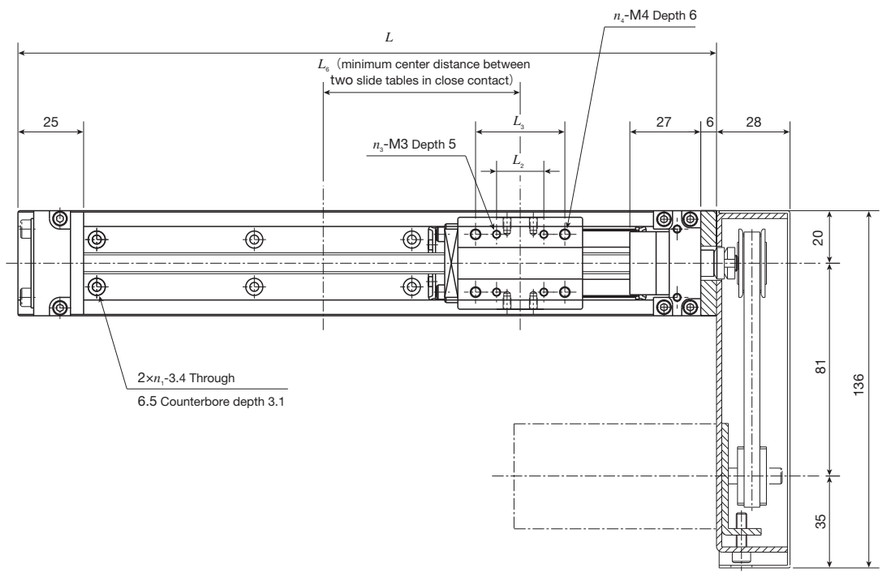

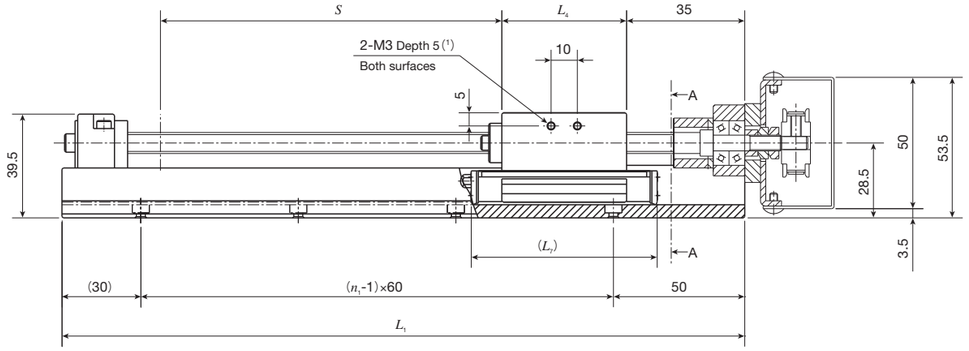

A-A Sectional dimension

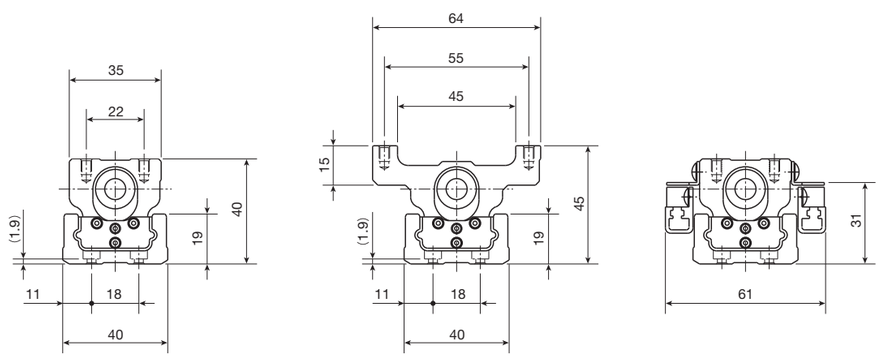

TU40C, TU40S, TU40G　　TU40F　　With sensor

Note (1) No thread hole is prepared for TU40F.
Remark: Parts for motor attachment are appended. This figure indicates a finished state after the motor attachment is assembled by the customer.

Dimensions of slide table　　unit: mm

Model and size	L_2	L_3	L_4	L_6	L_7	n_3	n_4	Mass kg
TU40C	–	–	19.5	45	43	–	2	0.1
TU40S	–	18	31.5	60	55	–	4	0.2
TU40G	18	34	47.5	75	71	4	4	0.3
TU40F	–	18	31.5	60	55	–	4	0.3

Dimensions of track rail　　unit: mm

Length of track rail L_1	Overall length L	n_1	Stroke length S(1)			Mass(2) kg			
			TU40C	TU40S TU40F	TU40G	TU40C	TU40S	TU40G	TU40F
140	146	2	45(–)	30(–)	– (–)	1.0	1.1	–	1.2
200	206	3	105(70)	90(40)	80(–)	1.2	1.3	1.4	1.4
260	266	4	165(130)	150(100)	140(70)	1.4	1.5	1.6	1.6
320	326	5	225(190)	210(160)	200(130)	1.6	1.7	1.8	1.8
380	386	6	285(250)	270(220)	260(190)	1.8	1.9	2.0	2.0

Notes (1) The value indicates the allowable stroke length when limit sensors are mounted. The value in ( ) represents dimension for two slide tables in close contact.
(2) The value shows the mass of the entire table with one slide table.

1N=0.102kgf=0.2248lbs.
1mm=0.03937inch

TU50 Motor folding back specification

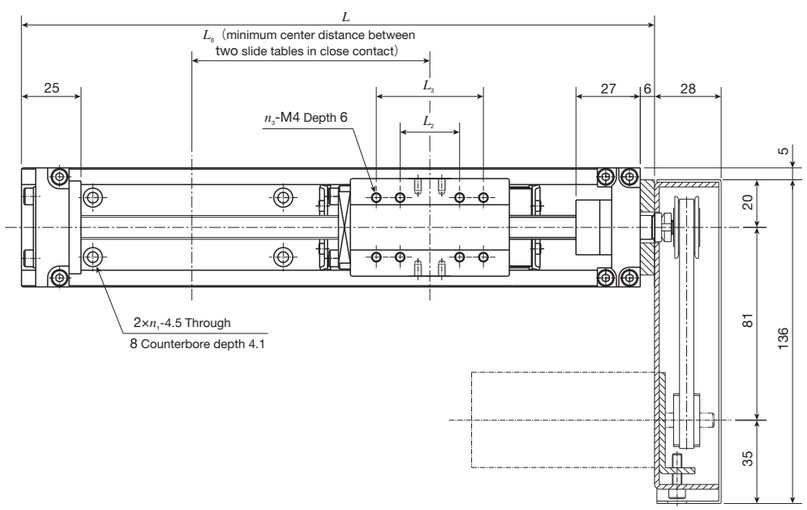

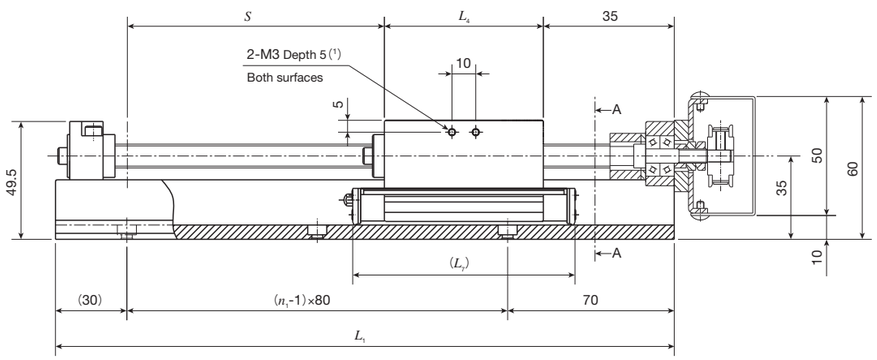

A-A Sectional dimension

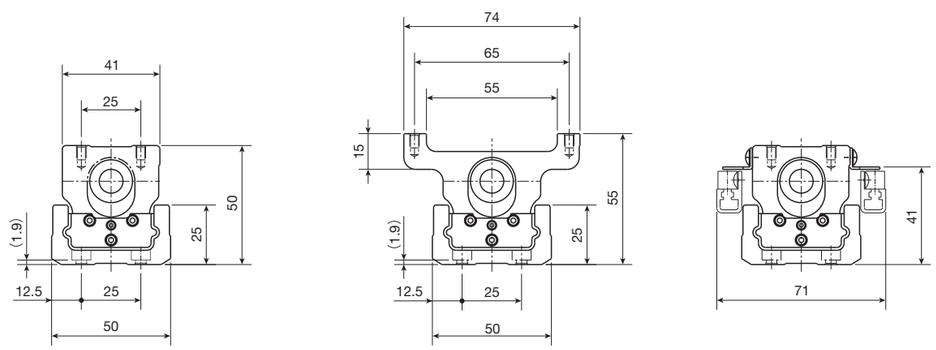

TU50C, TU50S, TU50G　　TU50F　　With sensor

Note (1) No thread hole is prepared for TU50F.
Remark: Parts for motor attachment are appended. This figure indicates a finished state after the motor attachment is assembled by the customer.

Dimensions of slide table　　unit: mm

Model and size	L_2	L_3	L_4	L_6	L_7	n_3	Mass kg
TU50C	–	–	23.8	55	51	2	0.2
TU50S	25	–	42.8	75	70	4	0.4
TU50G	25	45	66.8	100	94	8	0.7
TU50F	25	–	42.8	75	70	4	0.5

Dimensions of track rail　　unit: mm

Length of track rail L_1	Overall length L	n_1	Stroke length S(1)			Mass(2) kg			
			TU50C	TU50S TU50F	TU50G	TU50C	TU50S	TU50G	TU50F
180	186	2	80(–)	60(–)	– (–)	1.6	1.8	–	1.9
260	266	3	160(115)	140(75)	120(–)	1.9	2.1	2.4	2.2
340	346	4	240(195)	220(155)	200(110)	2.3	2.5	2.8	2.6
420	426	5	320(275)	300(235)	280(190)	2.7	2.9	3.2	3.0
500	506	6	400(355)	380(315)	360(270)	3.1	3.3	3.6	3.4
580	586	7	480(435)	460(395)	440(350)	3.5	3.7	3.9	3.8
660	666	8	560(515)	540(475)	520(430)	3.8	4.0	4.3	4.1

Notes (1) The value indicates the allowable stroke length when limit sensors are mounted. The value in ( ) represents dimension for two slide tables in close contact.
(2) The value shows the mass of the entire table with one slide table.

1N=0.102kgf=0.2248lbs.
1mm=0.03937inch

TU60 Motor folding back specification

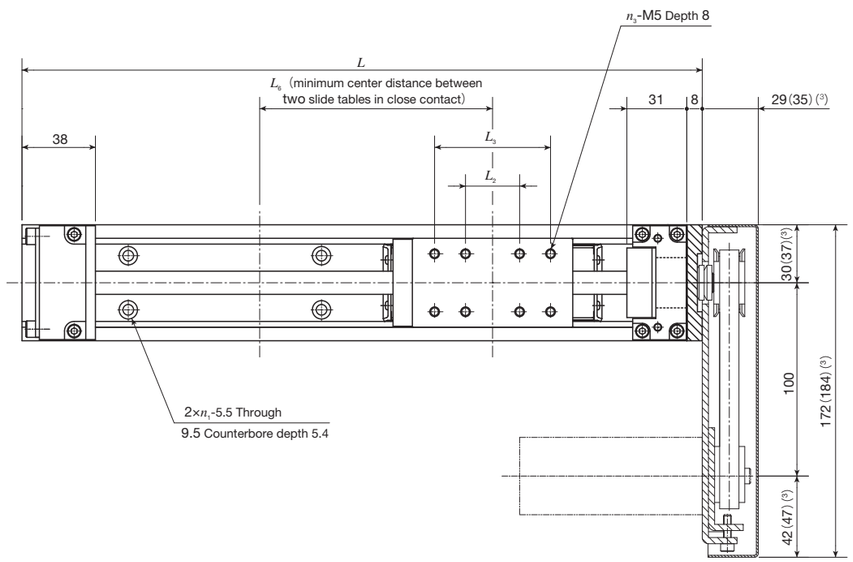

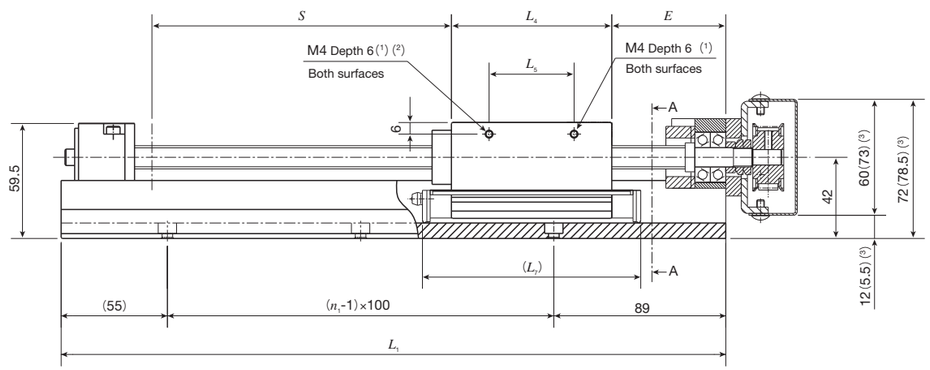

A-A Sectional dimension

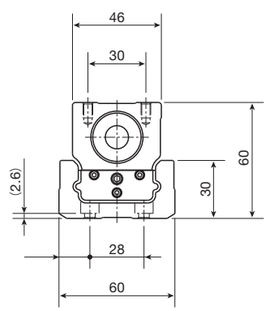

TU60C, TU60S, TU60G

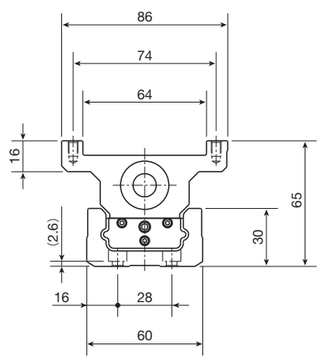

TU60FC, TU60FS, TU60FG

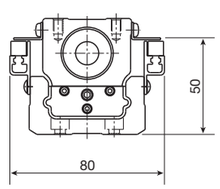

With sensor

Notes (1) No thread hole is prepared for TU60FC, TU60F, TU60FG.
(2) TU60C is ϕ3 depth 2.
(3) The dimension in ( ) is applied to motor attachment codes AR103 and AR107.
Remark: Parts for motor attachment are appended. This figure indicates a finished state after the motor attachment is assembled by the customer.

<Ball screw lead 5mm, 10mm>

Dimensions of slide table unit: mm

Model and size	L_2	L_3	L_4	L_5	L_6	L_7	n_3	E	Mass kg
TU60C	–	–	27.4	17.4	65	58	2	44	0.3
TU60S	28	–	52.4	18	90	83	4	39	0.6
TU60G	28	60	83	44	120.5	113	8	39	1.0
TU60FC	–	–	27.4	–	65	58	2	44	0.4
TU60F	28	–	52.4	–	90	83	4	39	0.8
TU60FG	28	60	83	–	120.5	113	8	39	1.3

Dimensions of track rail unit: mm

Length of track rail L_1	Overall length L	n_1	Stroke length S(1)			Mass(2) kg					
			TU60C TU60FC	TU60S TU60F	TU60G TU60FG	TU60C	TU60S	TU60G	TU60FC	TU60F	TU60FG
244	252	2	110(50)	95(–)	65(–)	3.6	3.9	–	3.7	4.1	–
344	352	3	210(150)	195(115)	165(55)	4.3	4.6	5.0	4.4	4.8	5.3
444	452	4	310(250)	295(215)	265(155)	5.1	5.4	5.7	5.2	5.5	6.0
544	552	5	410(350)	395(315)	365(255)	5.8	6.1	6.4	5.9	6.3	6.7
644	652	6	510(450)	495(415)	465(355)	6.6	6.8	7.2	6.7	7.0	7.5
744	752	7	610(550)	595(515)	565(455)	7.5	7.6	7.9	7.6	7.8	8.2

Notes (1) The value indicates the allowable stroke length when limit sensors are mounted. The value in ( ) represents dimension for two slide tables in close contact.
(2) The value shows the mass of the entire table with one slide table.

<Ball screw lead 20mm>

Dimensions of slide table unit: mm

Model and size	L_2	L_3	L_4	L_5	L_6	L_7	n_3	E	Mass kg
TU60C	–	–	27.4	17.4	65	58	2	64	0.3
TU60S	28	–	52.4	18	90	83	4	39	0.6
TU60G	28	60	83	44	120.5	113	8	39	1.0
TU60FC	–	–	27.4	–	65	58	2	64	0.4
TU60F	28	–	52.4	–	90	83	4	39	0.8
TU60FG	28	60	83	–	120.5	113	8	39	1.3

Dimensions of track rail unit: mm

Length of track rail L_1	Overall length L	n_1	Stroke length S(1)			Mass(2) kg					
			TU60C TU60FC	TU60S TU60F	TU60G TU60FG	TU60C	TU60S	TU60G	TU60FC	TU60F	TU60FG
244	252	2	95(–)	95(–)	65(–)	3.7	4.0	–	3.8	4.2	–
344	352	3	195(135)	195(115)	165(–)	4.4	4.7	5.1	4.5	4.9	5.4
444	452	4	295(235)	295(215)	265(155)	5.2	5.5	5.8	5.3	5.6	6.1
544	552	5	395(335)	395(315)	365(255)	5.9	6.2	6.5	6.0	6.4	6.8
644	652	6	495(435)	495(415)	465(355)	6.7	6.9	7.3	6.8	7.1	7.6
744	752	7	595(535)	595(515)	565(455)	7.6	7.7	8.0	7.7	7.9	8.3

Notes (1) The value indicates the allowable stroke length when limit sensors are mounted. The value in ( ) represents dimension for two slide tables in close contact.
(2) The value shows the mass of the entire table with one slide table.

1N=0.102kgf=0.2248lbs.
1mm=0.03937inch

TU86 Motor folding back specification

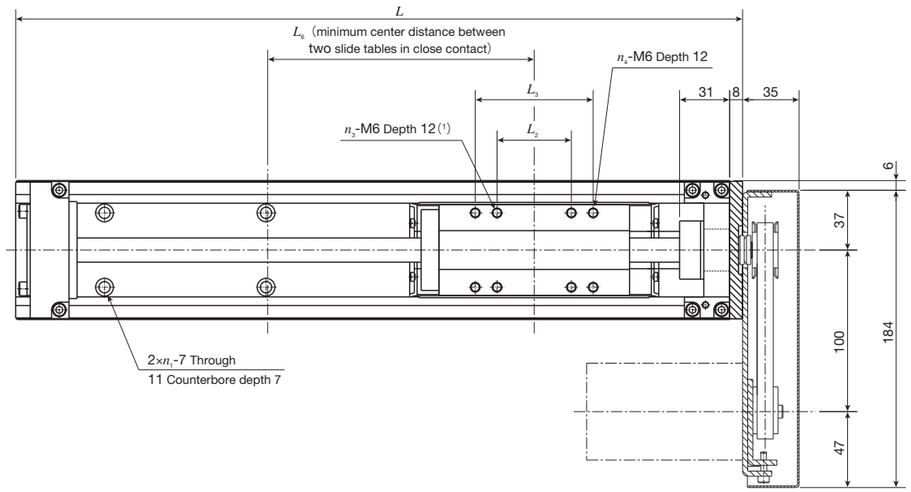

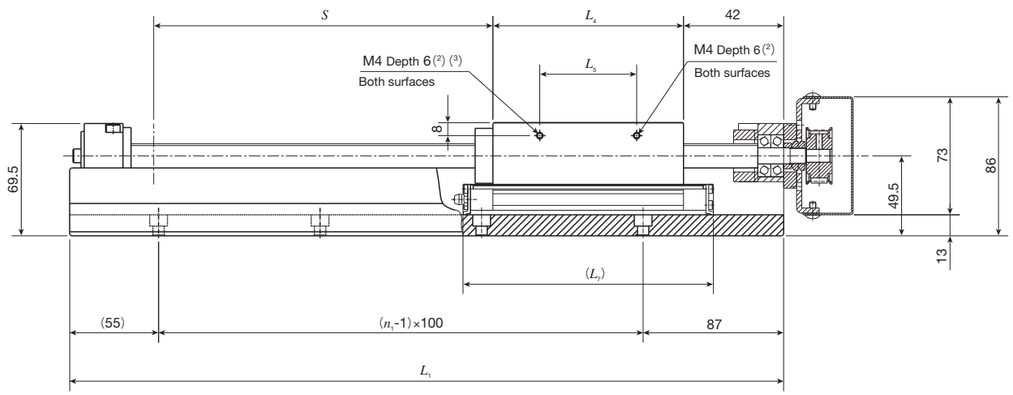

A-A Sectional dimension

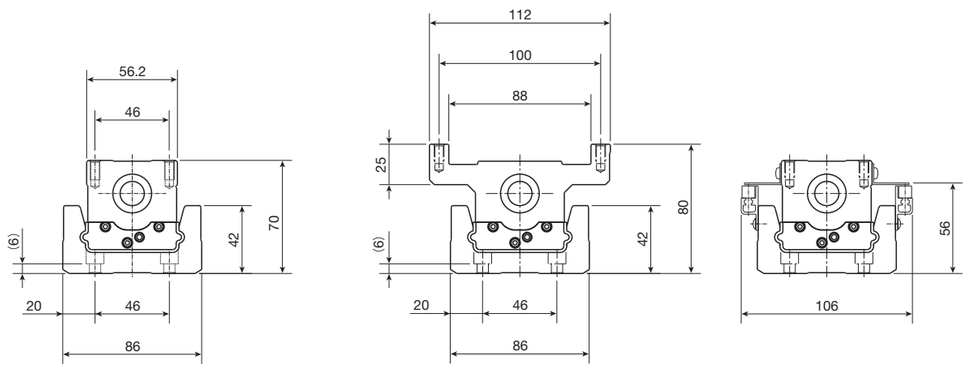

TU86C, TU86S, TU86G　　TU86FC, TU86FS, TU86FG　　With sensor

Notes (1) TU86F is M5 depth 12.
(2) No thread hole is prepared for TU86FC, TU86F, TU86FG.
(3) TU86C is ϕ3 depth 2.
Remark: Parts for motor attachment are appended. This figure indicates a finished state after the motor attachment is assembled by the customer.

Dimensions of slide table　　unit: mm

Model and size	L_2	L_3	L_4	L_5	L_6	L_7	n_3	n_4	Mass kg
TU86C	–	–	43	30	90	80	2	–	0.7
TU86S	46	–	93	63	140	130	4	–	1.7
TU86G	46	73	118	60	165	155	4	4	2.2
TU86FC	–	–	43	–	90	80	2	–	1.1
TU86F	28	46	93	–	140	130	4	4	2.3
TU86FG	46	73	118	–	165	155	4	4	3.0

Dimensions of track rail　　unit: mm

Length of track rail L_1	Overall length L	n_1	Stroke length S (1)			Mass (2) kg					
			TU86C TU86FC	TU86S TU86F	TU86G TU86FG	TU86C	TU86S	TU86G	TU86FC	TU86F	TU86FG
442	450	4	295(215)	245(115)	220(65)	10.3	11.3	11.8	10.7	11.9	12.6
542	550	5	395(315)	345(215)	320(165)	11.2	12.1	12.6	11.6	12.8	13.4
642	650	6	495(415)	445(315)	420(265)	12.7	13.6	14.2	13.1	14.3	15.0
742	750	7	595(515)	545(415)	520(365)	14.2	15.1	15.7	14.6	15.8	16.5
842	850	8	695(615)	645(515)	620(465)	15.4	16.3	16.8	15.8	17.0	17.6
942	950	9	795(715)	745(615)	720(565)	16.9	17.8	18.3	17.3	18.5	19.1
1042	1 050	10	895(815)	845(715)	820(665)	18.4	19.3	19.8	18.8	20.0	20.6
1142	1 150	11	995(915)	945(815)	920(765)	19.9	20.8	21.4	20.3	21.5	22.2

Notes (1) The value indicates the allowable stroke length when limit sensors are mounted. The value in ( ) represents dimension for two slide tables in close contact.
(2) The value shows the mass of the entire table with one slide table.

1N=0.102kgf=0.2248lbs.
1mm=0.03937inch

TU60S Table with bellows

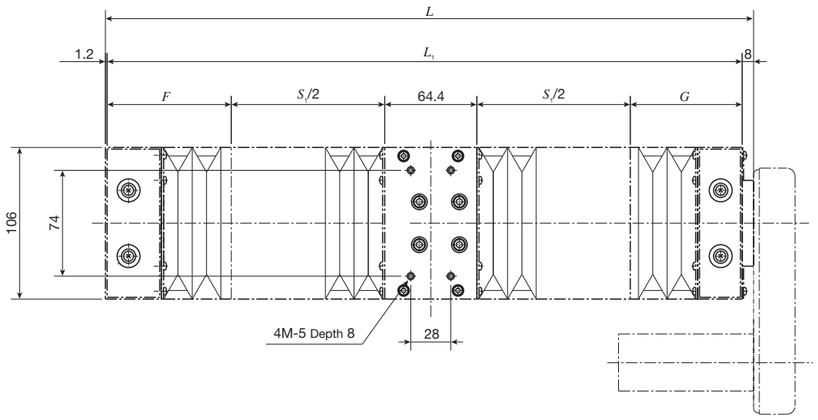

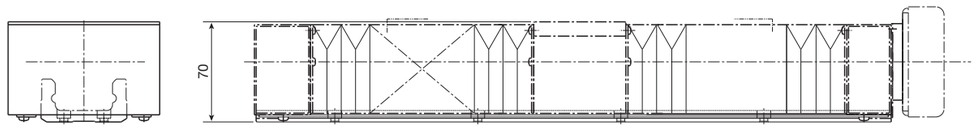

unit: mm

Length of track rail L_1	Overall length L	Limit stroke length (1) S_1	Stroke length (2) S	F	G
290 (244)	299.2(253.2)	73.6(68.6)	65(60)	59(59)	93(52)
390 (344)	399.2(353.2)	147.6(142.6)	140(135)	72(72)	106(65)
490 (444)	499.2(453.2)	219.6(214.6)	210(205)	86(86)	120(79)
590 (544)	599.2(553.2)	293.6(288.6)	285(280)	99(99)	133(92)
690 (644)	699.2(653.2)	393.6(388.6)	380(375)	99(99)	133(92)
790 (744)	799.2(753.2)	465.6(460.6)	455(450)	113(113)	147(106)

Notes (1) The value indicates the limit value of stroke with which the slide table can move.
(2) The value indicates the allowable stroke length when limit sensors are mounted.
Remarks 1. The values in ( ) are applied to table with bellows of motor folding back specification.
2. For the track rail mounting dimensions, please see the dimension table for TU60.
3. Applicable to tables with C-Lube.

TU86S Table with bellows

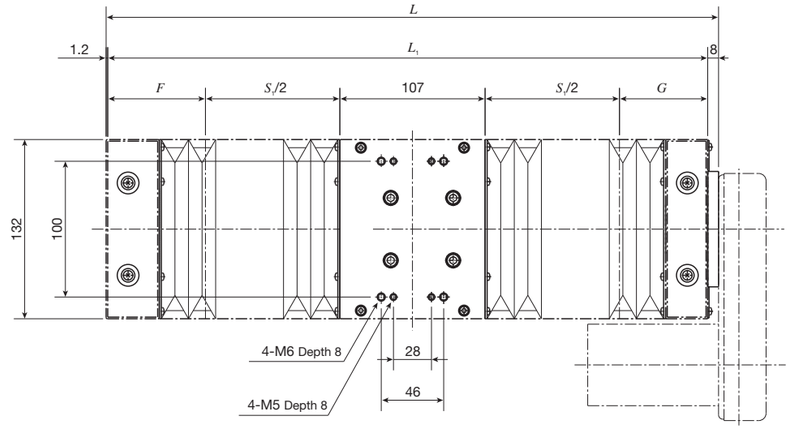

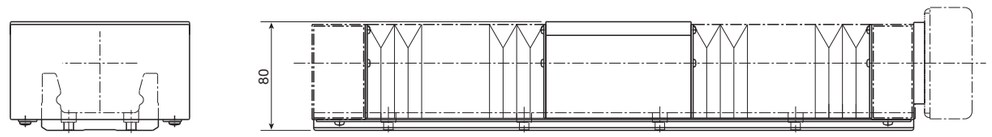

unit: mm

Length of track rail L_1	Overall length L	Limit stroke length (1) S_1	Stroke length (2) S	F	G
490(442)	499.2(451.2)	203(198)	195(190)	72(72)	108(65)
590(542)	599.2(551.2)	275(270)	265(260)	86(86)	122(79)
690(642)	699.2(651.2)	349(344)	340(335)	99(99)	135(92)
790(742)	799.2(751.2)	421(416)	410(405)	113(113)	149(106)
890(842)	899.2(851.2)	521(516)	510(505)	113(113)	149(106)
990(942)	999.2(951.2)	593(588)	580(575)	127(127)	163(120)
1 090(1 042)	1 099.2(1 051.2)	667(662)	655(650)	140(140)	176(133)
1 190(1 142)	1 199.2(1 151.2)	739(734)	730(725)	154(154)	190(147)

Notes (1) The value indicates the limit value of stroke with which the slide table can move.
(2) The value indicates the allowable stroke length when limit sensors are mounted.
Remarks 1. The values in ( ) are applied to table with bellows of motor folding back specification.
2. For the track rail mounting dimensions, please see the dimension table for TU86.
3. Applicable to tables with C-Lube.

1N=0.102kgf=0.2248lbs.
1mm=0.03937inch

TU40, TU50 Table with C-Lube

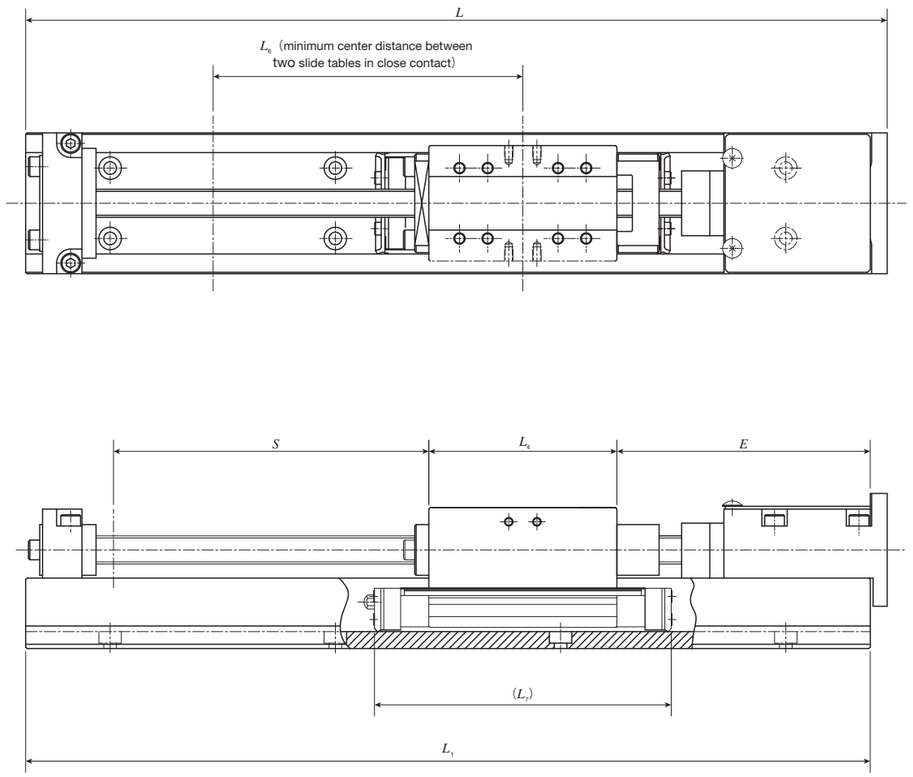

unit: mm

Model and size	Length of track rail L_1	Overall length L	Stroke length (1) S	E	L_4	L_6	L_7
TU40C	180	186	30(–)	90	19.5	60	55
	240	246	90(40)				
	300	306	150(100)				
	360	366	210(160)				
	420	426	270(220)				
TU40S TU40F	240	246	80(–)	90	31.5	70	67
	300	306	140(75)				
	360	366	200(135)				
	420	426	260(195)				
TU40G	240	246	60(–)	90	47.5	85	83
	300	306	120(–)				
	360	366	180(105)				
	420	426	240(165)				

Model and size	Length of track rail L_1	Overall length L	Stroke length (1) S	E	L_4	L_6	L_7
TU50C	220	226	65(–)	90	23.8	65	63
	300	306	145(90)				
	380	386	225(170)				
	460	466	305(250)				
	540	546	385(330)				
	620	626	465(410)				
	700	706	545(490)				
TU50S TU50F	220	226	45(–)	90	42.8	85	82
	300	306	125(50)				
	380	386	205(130)				
	460	466	285(210)				
	540	546	365(290)				
	620	626	445(370)				
	700	706	525(450)				
TU50G	300	306	100(–)	90	66.8	110	106
	380	386	180(80)				
	460	466	260(160)				
	540	546	340(240)				
	620	626	420(320)				
	700	706	500(400)				

Note (1) The value indicates the allowable stroke length when limit sensors are mounted. The value in ( ) represents dimension for two slide tables in close contact.
Remark: For dimensions of the slide table and track rail, please see the dimension table for each size.

1N=0.102kgf=0.2248lbs.
1mm=0.03937inch

TU60, TU86, TU100, TU130 Table with C-Lube

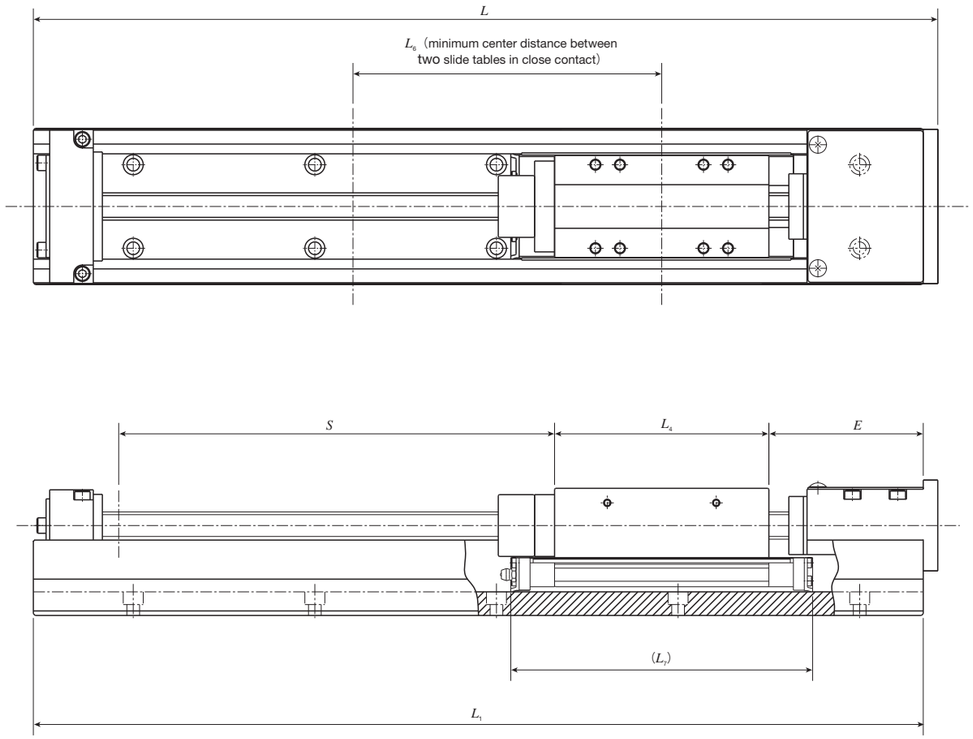

unit: mm

Model and size	Length of track rail L_1	Overall length L	Stroke length (1) S Lead 5mm Lead 10mm	Stroke length (1) S Lead 20mm	E Lead 5mm Lead 10mm	E Lead 20mm	L_4	L_6	L_7
TU60C TU60FC	290	298	90(40)	70(–)	100	120	27.4	75	70
	390	398	190(140)	170(120)					
	490	498	290(240)	270(220)					
	590	598	390(340)	370(320)					
	690	698	490(440)	470(420)					
	790	798	590(540)	570(520)					
TU60S TU60F	290	298	90(–)	70(–)	80	95	52.4	100	95
	390	398	190(110)	170(100)					
	490	498	290(210)	270(200)					
	590	598	390(310)	370(300)					
	690	698	490(410)	470(400)					
	790	798	590(510)	570(500)					
TU60G TU60FG	290	298	60(–)	– (–)	80	85	83	130	125
	390	398	160(50)	155(–)					
	490	498	260(150)	255(150)					
	590	598	360(250)	355(250)					
	690	698	460(350)	455(350)					
	790	798	560(450)	555(450)					

Model and size	Length of track rail L_1	Overall length L	Stroke length (1) S	E	L_4	L_6	L_7
TU86C TU86FC	490	498	260(190)	110	43	95	92
	590	598	360(290)				
	690	698	460(390)				
	790	798	560(490)				
	890	898	660(590)				
	990	998	760(690)				
	1 090	1 098	860(790)				
	1 190	1 198	960(890)				
TU86S TU86F	490	498	230(120)	85	93	145	142
	590	598	330(220)				
	690	698	430(320)				
	790	798	530(420)				
	890	898	630(520)				
	990	998	730(620)				
	1 090	1 098	830(720)				
	1 190	1 198	930(820)				
TU86G TU86FG	490	498	210(70)	85	118	170	167
	590	598	310(170)				
	690	698	410(270)				
	790	798	510(370)				
	890	898	610(470)				
	990	998	710(570)				
	1 090	1 098	810(670)				
	1 190	1 198	910(770)				
TU100S TU100F	1 010	1 020	670(540)	130	111	170	166
	1 160	1 170	820(690)				
	1 310	1 320	970(840)				
	1 460	1 470	1 120(990)				
TU130S TU130F	1 010	1 020	630(480)	140	132	195	190
	1 160	1 170	780(630)				
	1 310	1 320	930(780)				
	1 460	1 470	1 080(930)				
	1 610	1 620	1 230(1 080)				

Note (1) The value indicates the allowable stroke length when limit sensors are mounted. The value in ( ) represents dimension for two slide tables in close contact.
Remark: For dimensions of the slide table and track rail, please see the dimension table for each size.

1N=0.102kgf=0.2248lbs.
1mm=0.03937inch

TU40, TU50 Table with C-Lube (Motor folding back specification)

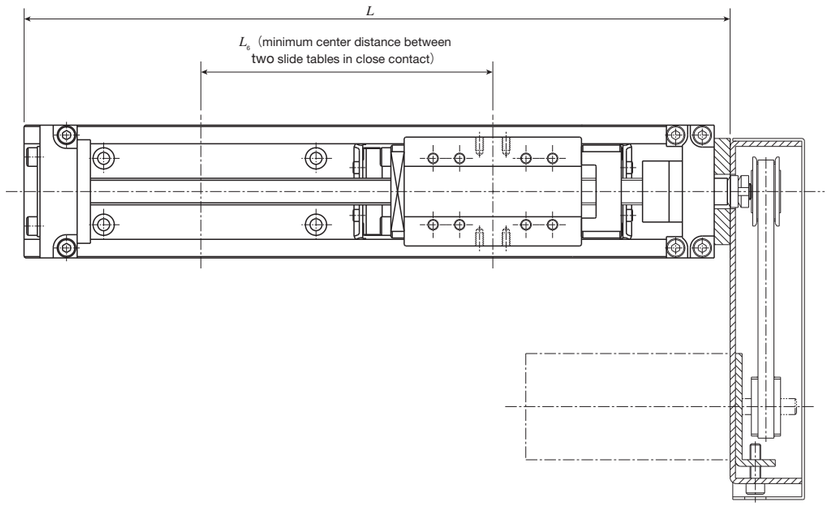

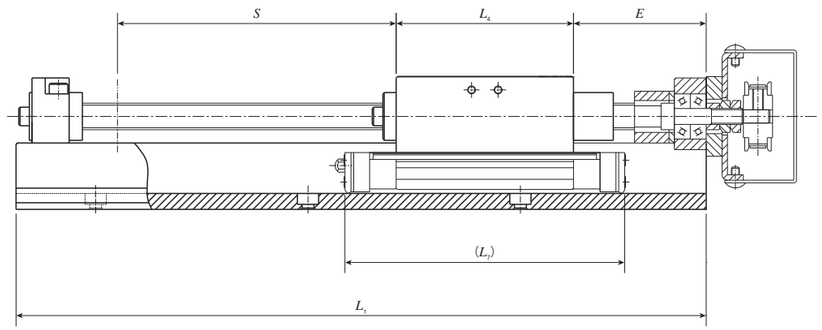

unit: mm

Model and size	Length of track rail L_1	Overall length L	Stroke length (1) S	E	L_4	L_6	L_7
TU40C	140	146	30(−)	50	19.5	60	55
	200	206	90(40)				
	260	266	150(100)				
	320	326	210(160)				
	380	386	270(220)				
TU40S TU40F	200	206	80(−)	50	31.5	70	67
	260	266	140(75)				
	320	326	200(135)				
	380	386	260(195)				
TU40G	200	206	60(−)	50	47.5	85	83
	260	266	120(−)				
	320	326	180(105)				
	380	386	240(165)				

Model and size	Length of track rail L_1	Overall length L	Stroke length (1) S	E	L_4	L_6	L_7
TU50C	180	186	65(−)	50	23.8	65	63
	260	266	145(90)				
	340	346	225(170)				
	420	426	305(250)				
	500	506	385(330)				
	580	586	465(410)				
	660	666	545(490)				
TU50S TU50F	180	186	45(−)	50	42.8	85	82
	260	266	125(50)				
	340	346	205(130)				
	420	426	285(210)				
	500	506	365(290)				
	580	586	445(370)				
	660	666	525(450)				
TU50G	260	266	100(−)	50	66.8	110	106
	340	346	180(80)				
	420	426	260(160)				
	500	506	340(240)				
	580	586	420(320)				
	660	666	500(400)				

Note (1) The value indicates the allowable stroke length when limit sensors are mounted. The value in ( ) represents dimension for two slide tables in close contact.

Remarks 1. Parts for motor attachment are appended. This figure indicates a finished state after the motor attachment is assembled by the customer.
2. For dimensions of the slide table and track rail, please see the dimension table for each size.

1N=0.102kgf=0.2248lbs.
1mm=0.03937inch

TU60, TU86 Table with C-Lube (Motor folding back specification)

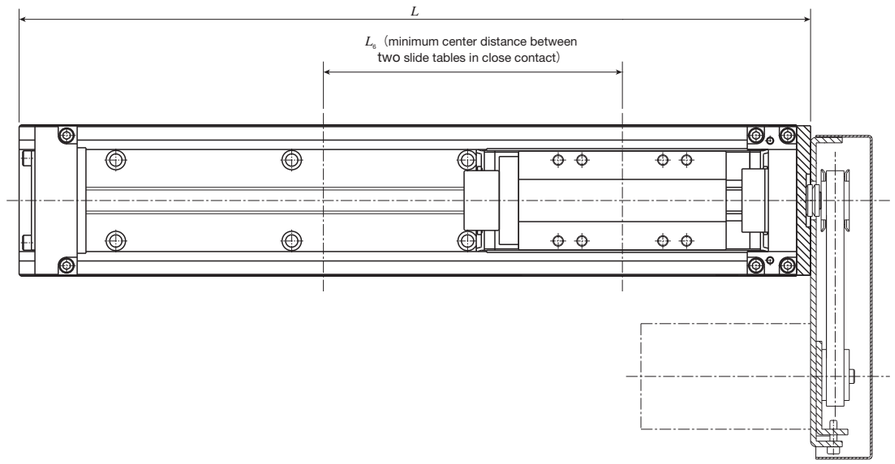

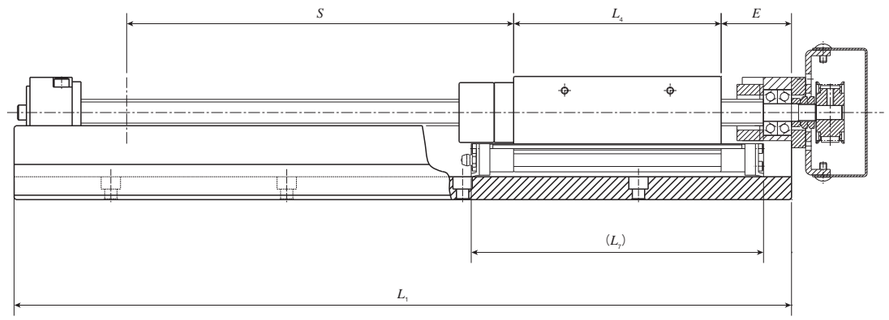

unit: mm

Model and size	Length of track rail L_1	Overall length L	Stroke length (1) S Lead 5mm Lead 10mm	Stroke length (1) S Lead 20mm	E Lead 5mm Lead 10mm	E Lead 20mm	L_4	L_6	L_7
TU60C TU60FC	244	252	90(40)	70(–)	55	74	27.4	75	70
	344	352	190(140)	170(120)					
	444	452	290(240)	270(220)					
	544	552	390(340)	370(320)					
	644	652	490(440)	470(420)					
	744	752	590(540)	570(520)					
TU60S TU60F	244	252	80(–)	70(–)	40	49	52.4	100	95
	344	352	180(110)	170(100)					
	444	452	280(210)	270(200)					
	544	552	380(310)	370(300)					
	644	652	480(410)	470(400)					
	744	752	580(510)	570(500)					
TU60G TU60FG	244	252	50(–)	– (–)	40	39	83	130	125
	344	352	150(50)	155(–)					
	444	452	250(150)	255(150)					
	544	552	350(250)	355(250)					
	644	652	450(350)	455(350)					
	744	752	550(450)	555(450)					

Model and size	Length of track rail L_1	Overall length L	Stroke length (1) S	E	L_4	L_6	L_7
TU86C TU86FC	442	450	250(190)	70	43	95	92
	542	550	350(290)				
	642	650	450(390)				
	742	750	550(490)				
	842	850	650(590)				
	942	950	750(690)				
	1 042	1 050	850(790)				
	1 142	1 150	950(890)				
TU86S TU86F	442	450	230(120)	40	93	145	142
	542	550	330(220)				
	642	650	430(320)				
	742	750	530(420)				
	842	850	630(520)				
	942	950	730(620)				
	1 042	1 050	830(720)				
	1 142	1 150	930(820)				
TU86G TU86FG	442	450	210(70)	40	118	170	167
	542	550	310(170)				
	642	650	410(270)				
	742	750	510(370)				
	842	850	610(470)				
	942	950	710(570)				
	1 042	1 050	810(670)				
	1 142	1 150	910(770)				

Note (1) The value indicates the allowable stroke length when limit sensors are mounted. The value in ( ) represents dimension for two slide tables in close contact.

Remarks 1. Parts for motor attachment are appended. This figure indicates a finished state after the motor attachment is assembled by the customer.
2. For dimensions of the slide table and track rail, please see the dimension table for each size.

1N=0.102kgf=0.2248lbs.
1mm=0.03937inch

IKO Precision Positioning Table TU

Without ball screw specification

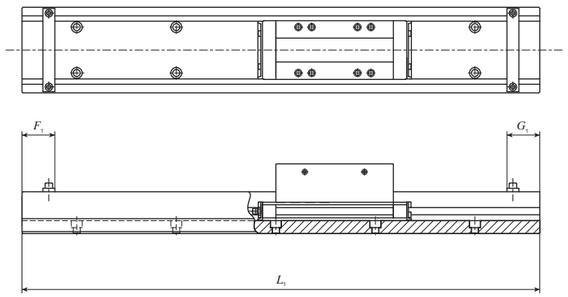

unit: mm

Model and size	Specification of track rail	Length of track rail L_1	Without bridge cover F_1	Without bridge cover G_1	With bridge cover F_1	With bridge cover G_1
TU 25	Without motor folding back	130	14	14	14	14
		165				
		200				
TU 30	Without motor folding back	140	14	14	14	14
		180				
		220				
		260				
		300				
		340				
TU 40	Without motor folding back	180	20	18	20	18
		240				
		300				
		360				
		420				
	Motor folding back specification	140	20	18	20	18
		200				
		260				
		320				
		380				
TU 50	Without motor folding back	220	20	18	20	18
		300				
		380				
		460				
		540				
		620				
		700				
	Motor folding back specification	180	20	18	20	18
		260				
		340				
		420				
		500				
		580				
		660				

Model and size	Specification of track rail	Length of track rail L_1	Without bridge cover F_1	Without bridge cover G_1	With bridge cover F_1	With bridge cover G_1
TU 60	Without motor folding back	290	32	17	35	29
		390				
		490				
		590				
		690				
		790				
		990				
		1190	32	17	–	–
	Motor folding back specification	244	32	28	35	29
		344				
		444				
		544				
		644				
		744				
TU 86	Without motor folding back	490	32	19	35	29
		590				
		690				
		790				
		890				
		990				
		1 090				
		1 190				
		1 390				
		1 590	32	19	–	–
	Motor folding back specification	442	32	28	35	29
		542				
		642				
		742				
		842				
		942				
		1 042				
		1 142				
TU 100	Without motor folding back	1 010	35	34	35	34
		1 160				
		1 310				
		1 460				
TU 130	Without motor folding back	1 010	35	38	35	38
		1 160				
		1 310				
		1 460				
		1 610				

Remark: For dimensions of the slide table and track rail, please see the dimension table for each size.

1N=0.102kgf=0.2248lbs.
1mm=0.03937inch